AUT
VALVE MANUFACTURER

AUT VALVE
CATALOGUE
2026



COPYRIGHT
GPRO VALVE SDN BHD

GPRO VALVE SDN BHD

The Manufacturer of Malaysia AUT Valves and Water Meters

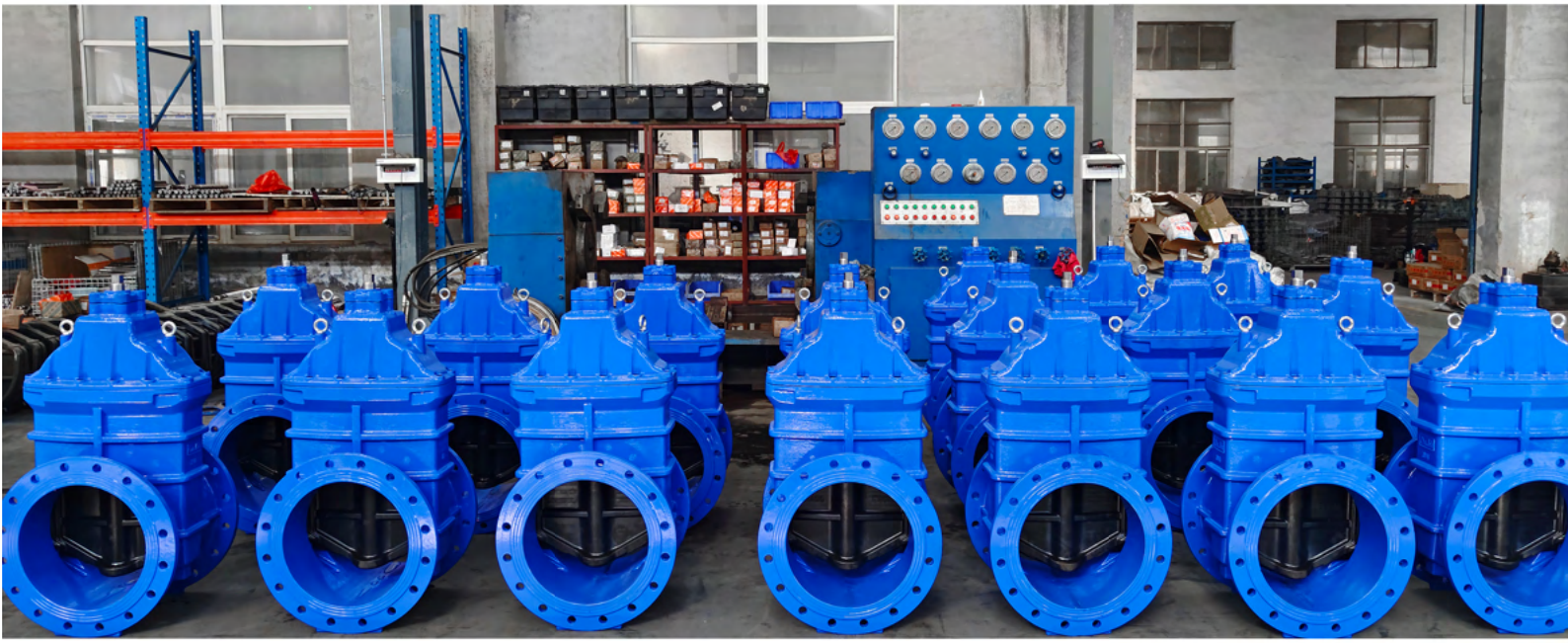

As the Malaysia's leading smart water metering system provider , we have developed a comprehensive smart metering system range for the Domestic, Commercial, Agriculture and Industrial areas . Moving with the changes in IOT technology and higher precision metering, we are adding more research cost on reduce NRW (Non-Revenue water), achieving the high-efficiency using on water

Today, we have many partners from all over the world with long time cooperation. Since 2017, to provide better services, we have started to go abroad, investigate local water metering markets, start some pilot projects and visit our regular and new customers .

We will never forget the mission from GPRO " To be the leader for water metering system in abroad market". In future, we will do more in water saving, precision metering and intelligent control of water management.

Mission

Accurately measure every drop of water's value

Vision

Be the leader of water metering industry in oversea market

Values

Sincerity, altruism, innovation

WHY CHOOSE US

Professional R & D team supports the customization request including the meters parts, various signal output, the data management system and charge system.
The aim is to achieve the water meter ing system localization .

We have a strict quality management system, and experienced technical engineers are in charge of production and calibration, so as to ensure the quality of each water meter before delivery.
Each order provides the test result and inspection report of each water meter.

About the delivery ability side , we have stable stock to guarantee fast delivery. For sample and trial order, we have the special production line to make sure the fast delivery.

Our fund is guaranteed, the payment method is flexible.

we are building the complete after-sell services station in overseas markets As to the after-sales service system, and looking for more local partners can start the cooperation with us.



FOR CONTRACTOR

1. Investigate the actual installation site, such as water meter installation location, length requirements, signal laying, anti freezing, anti magnetic interference and other requirements.
2. Customization of the development of billing software and water meters can be supported according to the actual project needs.
3. According to the project budget, various solutions such as mechanical meters, ultrasonic water meters and various intelligent remote water meters can be provided.
4. The water meter conform international standards and certificates, and can meet the requirements of the municipal water department.
5. Assist in pilot, sample test and installation.
6. Various flexible payment methods can be selected.
7. Large raw material inventory and fast delivery time.
8. The warranty period can be extended according to the requirements of the water department.
9. Key customers and markets can be supported localized service teams to satisfy more efficient and direct on-site service requirements.

FOR MANUFACTURERS

1. Long term and exclusive cooperation agreements can be signed to protect the local manufacturer market.
2. We can help customers fully realize the needs of localized assembly by providing equipment, technology and accessories, training, etc.
3. Assist manufacturers to develop water meters, software and billing systems suitable for the local market needs.
4. Assist in application of the localization certification.
5. Cooperative bidding.
6. Jointly participate in local exhibitions and assist in market development.



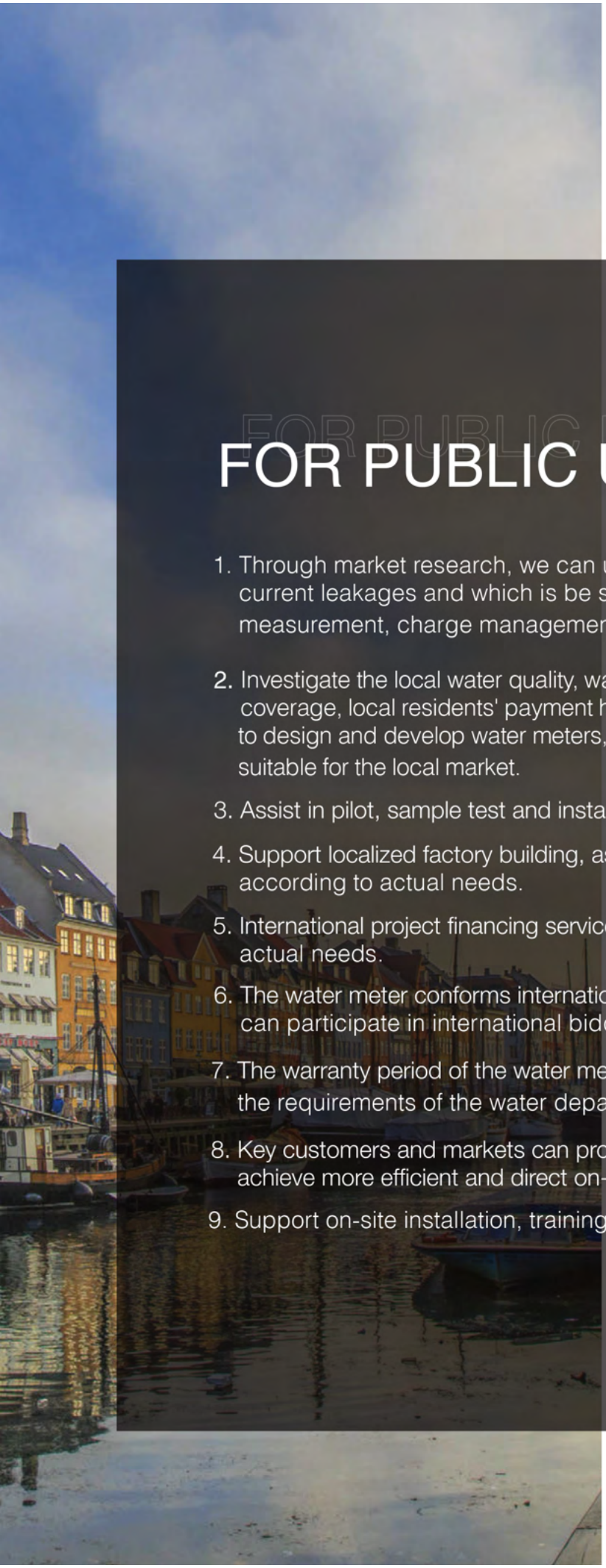

SOLUTION

FOR PUBLIC UTILITY

1. Through market research, we can understand the main problem for the current leakages and which is be solved urgently, such as basic measurement, charge management or main pipeline leakage.
2. Investigate the local water quality, water pipenetwork, network signal coverage, local residents' payment habits, managers' charging logic, etc., to design and develop water meters, networks and charging systems suitable for the local market.
3. Assist in pilot, sample test and installation for water metering system.
4. Support localized factory building, assembly, calibration and production according to actual needs.
5. International project financing services can be provided according to actual needs.
6. The water meter conforms international standards and certificates and can participate in international bidding .
7. The warranty period of the water meter can be extended according to the requirements of the water department.
8. Key customers and markets can provide localized service teams to achieve more efficient and direct on-site service requirements .
9. Support on-site installation, training guidance, etc.

GATE VALVE
MODEL FIG01



PRODUCTION STANDARDS

MODEL FIG01 I DN50 - DN1200
PN10 - PN16

Design	BS 5163:1994, TYPE A
Connection	BS 6755
Flange	BS 4504
Tests	BS 6755
Pressure Class	PN 10/16
Corrosion Protection	Electrostatic Powder Epoxy

VERSIONS

- Standard version with Handwheel
- Standard version with Cap

TEMPERATURE

- Maximum 70 °C

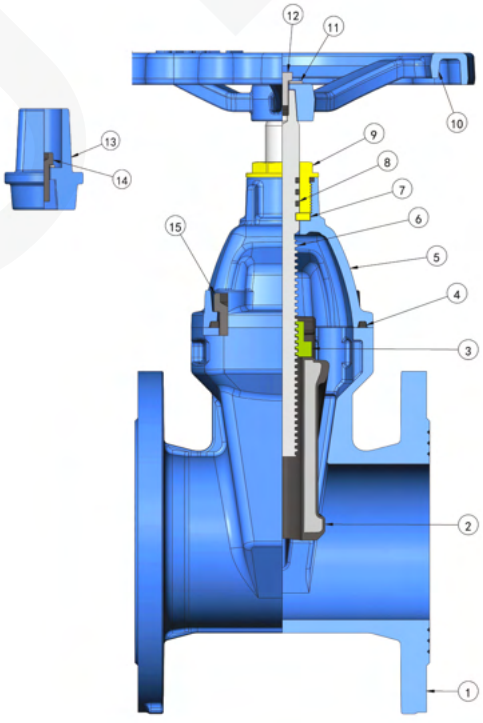

MATERIAL SELECTION

No	Items	Material	Standard
1	Body	Ductile Iron	EN GJS 500-7
2	Valve plate	Ductile iron covered with rubber	EN GJS 500-7 EPDM
3	Wedge Nut	Forged Brass	CZ122/CA133
4	Sealing ring	Rubber	EPDM
5	Bonnet	Ductile Iron	EN GJS 500-7
6	Stem	Stainless Steel	AISI 420/AISI 431
7	Washer	Brass	CZ122
8	0-ring	Rubber	EPDM
9	Bushing	Brass	CZ122
10	Handwheel	Ductile Iron	EN GJS 500-7
11	Washer	Stainless Steel	SS304
12	Bolt	Stainless Steel	SS304
13	Cap	Ductile Iron	EN GJS 500-7
14	In Hex Bolt	Stainless Steel	SS304
15	In Hex Bolt	Stainless Steel	SS304

GATE VALVE
MODEL FIG01

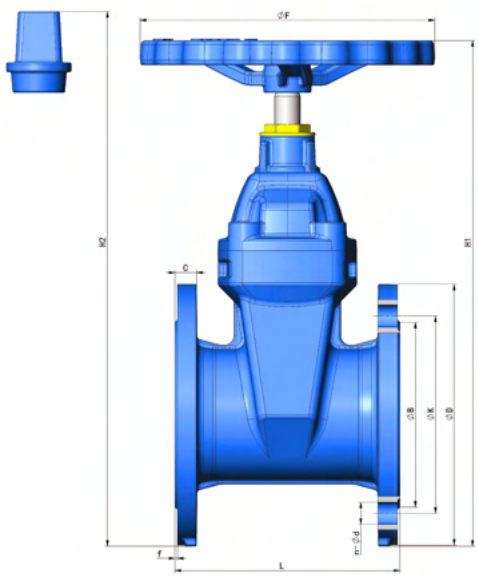

FEATURE

- 100% tight sealing is achieved through EPDM covered wedge fully contacting the fusion bonded epoxy coated flow surface.
- The body and bonnet are manufactured from ductile iron castings. It is resistant to high tensile stress occurring in pipelines.
- Low operating torque due to plastic sliding guides on the wedge
- Maintenance-free and corrosion-resistant stem sealing
- With O-ring sealing
- Large conical stem hole in the wedge prevents stagnant water
- Wedge and body guide rails ensure stable operation
- Stainless steel stem with rolled threads for high strength & low operation torque.
- Inner and outer surfaces are coated with minimum 300 microns fusion bonded epoxy.
- Can be operated with actuator, gearbox, handwheel and extension spindle.
- The top of the shaft bearing and shaft nuts are made of brass. High precision machining enables low operation torques.
- Full bore characteristics without distruption of flow results in low pressure drops across the valve

DIMENTIONS

DN	L		H1	H2	ØB		ØD		ØK		n-Ød		C		f	ØF
(mm)	BS	F4			PN10	P16	PN10	P16	PN10	P16	PN10	P16	PN10	P16		
50	178	150	300	353	99		165		125		4-Ø19		19		3	180
65	190	170	340	400	118		185		145		4-Ø19		19		3	180
80	203	180	370	423	132		200		160		8-Ø19		19		3	180
100	229	190	435	475	156		220		180		8-Ø19		19		3	250
125	254	200	490	533	184		250		210		8-Ø19		19		3	250
150	267	210	567	609	211		285		240		8-Ø23		19		3	300
200	292	230	683	711	266		340		295		8-Ø23	12-Ø23	20		3	330
250	330	250	810	840	319		395	405	350	355	12-Ø23	12-Ø28	22		3	380
300	356	270	910	940	370		445	160	400	410	12-Ø23	12-Ø28	24. 5		4	380
350	381	290	1050	1110	429		505	520	460	470	16-Ø23	16-Ø28	24. 5	26.5	4	480
400	406	310	1170	1240	480		565	580	515	525	16-Ø28	16-Ø31	24.5	28	4	480
450	432	330	1300	1360	530	548	615	640	565	585	20-Ø28	20-Ø31	25.5	30	4	600
500	457	350	1380	1460	582	609	670	715	620	650	20-Ø28	20-Ø34	26.5	31.5	4	600
600	508	390	1650	1705	682	720	780	840	725	770	20-Ø31	20-Ø37	30	36	5	600
700	610	430	2150		794		895		840		24-Ø31		32. 5		5	
800	660	470	2390		901		1015		950		24-Ø34		35		5	
900	711	510	2700		1001		1115		1050		28-Ø34		37.5		5	
1000	811	550	2920		1112		1230		1160		28-Ø37		40		5	
1200	1015	630	3360		1328		1455		1380		32-Ø40		45		5	

GATE VALVE
MODEL FIG01



PRODUCTION STANDARDS

MODEL FIG01 I DN350 - DN600
PN10 - PN16

Design	EN 1171
Flange	EN 1092-2 PN10/PN16
Tests	EN 12266-1
Drive Form	Handwheel, Cap
Temperature	0-80º
Seal Test	11/18 Bar
Body Test	15/24 Bar

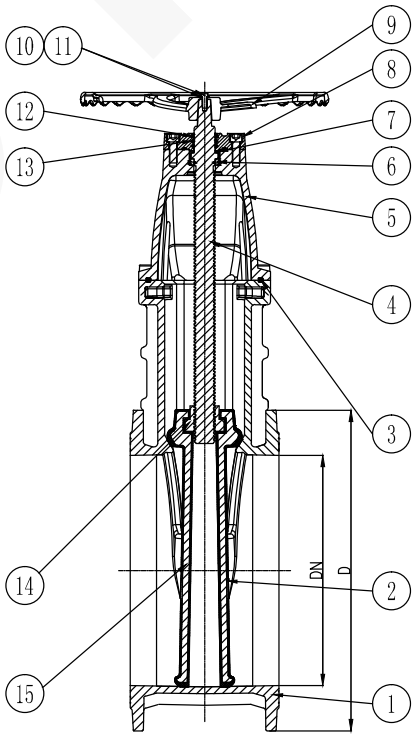

No	Name	Materials
1	Body	Ductile Iron
2	Disc	EPDM+Ductile iron
3	Bonnet Gasket	NBR
4	Stem	Stainless Steel
5	Bonet	Ductile Iron
6	Thrust Sleeve	Brass
7	Thrust Sleeve	Brass
8	Gland	Ductile Iron
9	Handwheel	Ductile Iron
10	Bolt	Stainless Steel
11	Flat Washer	Stainless Steel
12	Dustcover	NBR
13	O ring	NBR
14	Stem Nut	Bronze
15	Core	Ductile Iron
16	Screw	Stainless Steel
17	Screw	Stainless Steel
18	Lifting Bolt	Galvanized Cabon Steel

RISING STEM GATE VALVE
MODEL FIG013



PRODUCTION STANDARDS

MODEL FIG013 I DN50 - DN600
PN10 - PN16

Design	BS 5163:1994, TYPE A
Connection	BS 6755
Tests	BS 6755
Pressure Class	PN 10/16
Corrosion Protection	Electrostatic Powder Epoxy

FEATURE

- The position of the fire protection valve can be monitored with the use of the on-board tracking circuitry. This avoids damage that could be caused by the valve in a closed position during a possible fire.
- Full bore characteristics without distruption of flow results in low the valve.
- 100 % tight sealing is achieved through EPDM covered wedge fully contacting the fusion bonded Epoxy coated flow surface.
- The top of the shaft bearing and shaft nuts are made of brass. High precision machining enables low.
- Operation torques. Inner and outer surfaces are coated with minimum • Stanc 300 microns.
- Flanged end connections.
- Lightweight ductile iron body and bonnet.
- Lower operating torque, designed for a higher life cycle.

TEMPERATURE

- Maximum 70 °C

SCOPE OF APPLICATION

- Hot water lines
- Cold water lines
- Fire Application
- Power Plants
- Industry

RISING STEM GATE VALVE
MODEL FIG013

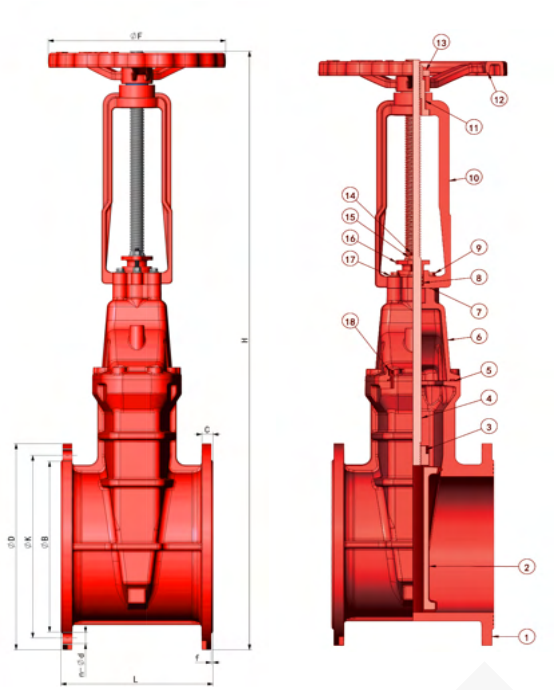

MATERIAL SELECTION

No	Items	Material	Standard
1	Body	Ductile Iron	EN GJS 500-7
2	Valve plate	Ductile iron covered with rubber	EN GJS 500-7 EPDM
3	Wedge Nut	Forged Brass	CZ122
4	Stem	Stainless Steel	AISI 420/AISI 431
5	Sealing ring	Rubber	EPDM
6	Bonet	Ductile Iron	EN GJS 500-7
7	O-ring	Rubber	EPDM
8	Washer	PTFE	Commercial
9	Bolt	CS	Commercial
10	Suport	Ductile Iron	EN GJS 500-7
11	Screw nut	Forged Brass	CZ122
12	Handwheel	Ductile Iron	EN GJS 500-7
13	Lock nut	Forged Brass	CZ122
14	Screw	CS	Commercial
15	Nut	CS	Commercial
16	Platen	Ductile Iron	EN GJS 500-7
17	Washer	CS	Commercial
18	In Hex Bolt	CS	Commercial

DIMENTIONS

DN	L		H	ØB		ØD		ØK		n-Ød		C		f	ØF
(mm)	BS	F4		PN10	P16	PN10	P16	PN10	P16	PN10	P16	PN10	P16		
50	178	150	300	99		165		125		4-Ø19		19		3	180
65	190	170	340	118		185		145		4-Ø19		19		3	180
80	203	180	370	132		200		160		8-Ø19		19		3	180
100	229	190	435	156		220		180		8-Ø19		19		3	250
125	254	200	490	184		250		210		8-Ø19		19		3	250
150	267	210	567	211		285		240		8-Ø23		19		3	300
200	292	230	683	266		340		295		8-Ø23	12-Ø23	20		3	330
250	330	250	810	319		395	405	350	355	12-Ø23	12-Ø28	22		3	380
300	356	270	910	370		445	160	400	410	12-Ø23	12-Ø28	24. 5		4	380
350	381	290	1050	429		505	520	460	470	16-Ø23	16-Ø28	24. 5	26.5	4	480
400	406	310	1170	480		565	580	515	525	16-Ø28	16-Ø31	24.5	28	4	480
450	432	330	1300	530	548	615	640	565	585	20-Ø28	20-Ø31	25.5	30	4	600
500	457	350	1380	582	609	670	715	620	650	20-Ø28	20-Ø34	26.5	31.5	4	600
600	508	390	1650	682	720	780	840	725	770	20-Ø31	20-Ø37	30	36	5	600

RISING STEM GATE VALVE (SIGNAL SWITCH)

MODEL FIG015



PRODUCTION STANDARDS

MODEL FIG015 I DN50 - DN600
PN10 - PN16

Design	BS 5163:1994, TYPE A
Connection	BS 6755
Tests	BS 6755
Pressure Class	PN 10/16
Corrosion Protection	Electrostatic Powder Epoxy

FEATURE

- The position of the fire protection valve can be monitored with the use of the on-board tracking circuitry. This avoids damage that could be caused by the valve in a closed position during a possible fire.
- Full bore characteristics without distruption of flow results in low the valve.
- 100 % tight sealing is achieved through EPDM covered wedge fully contacting the fusion bonded Epoxy coated flow surface.
- The top of the shaft bearing and shaft nuts are made of brass. High precision machining enables low.
- Operation torques. Inner and outer surfaces are coated with minimum • Stanc 300 microns.
- Flanged end connections.
- Lightweight ductile iron body and bonnet.
- Lower operating torque, designed for a higher life cycle.

TEMPERATURE

- Maximum 70 °C

SCOPE OF APPLICATION

- Hot water lines
- Cold water lines
- Fire Application
- Power Plants
- Industry

RISING STEM GATE VALVE (SIGNAL SWITCH)

MODEL FIG015

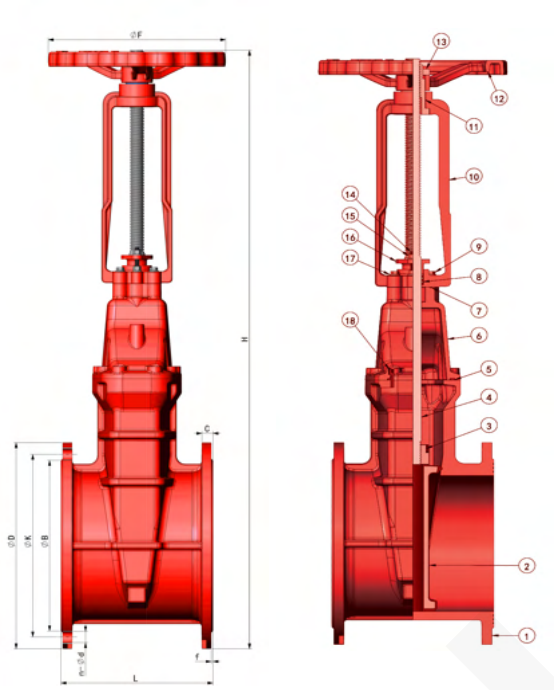

MATERIAL SELECTION

No	Items	Material	Standard
1	Body	Ductile Iron	EN GJS 500-7
2	Valve plate	Ductile iron covered with rubber	EN GJS 500-7 EPDM
3	Wedge Nut	Forged Brass	CZ122
4	Stem	Stainless Steel	AISI 420/AISI 431
5	Sealing ring	Rubber	EPDM
6	Bonet	Ductile Iron	EN GJS 500-7
7	O-ring	Rubber	EPDM
8	Washer	PTFE	Commercial
9	Bolt	CS	Commercial
10	Suport	Ductile Iron	EN GJS 500-7
11	Screw nut	Forged Brass	CZ122
12	Handwheel	Ductile Iron	EN GJS 500-7
13	Lock nut	Forged Brass	CZ122
14	Screw	CS	Commercial
15	Nut	CS	Commercial
16	Platen	Ductile Iron	EN GJS 500-7
17	Washer	CS	Commercial
18	In Hex Bolt	CS	Commercial

DIMENTIONS

DN	L		H	ØB		ØD		ØK		n-Ød		C		f	ØF
(mm)	BS	F4		PN10	P16	PN10	P16	PN10	P16	PN10	P16	PN10	P16		
50	178	150	300	99		165		125		4-Ø19		19		3	180
65	190	170	340	118		185		145		4-Ø19		19		3	180
80	203	180	370	132		200		160		8-Ø19		19		3	180
100	229	190	435	156		220		180		8-Ø19		19		3	250
125	254	200	490	184		250		210		8-Ø19		19		3	250
150	267	210	567	211		285		240		8-Ø23		19		3	300
200	292	230	683	266		340		295		8-Ø23	12-Ø23	20		3	330
250	330	250	810	319		395	405	350	355	12-Ø23	12-Ø28	22		3	380
300	356	270	910	370		445	160	400	410	12-Ø23	12-Ø28	24. 5		4	380
350	381	290	1050	429		505	520	460	470	16-Ø23	16-Ø28	24. 5	26.5	4	480
400	406	310	1170	480		565	580	515	525	16-Ø28	16-Ø31	24.5	28	4	480
450	432	330	1300	530	548	615	640	565	585	20-Ø28	20-Ø31	25.5	30	4	600
500	457	350	1380	582	609	670	715	620	650	20-Ø28	20-Ø34	26.5	31.5	4	600
600	508	390	1650	682	720	780	840	725	770	20-Ø31	20-Ø37	30	36	5	600

SWING CHECK VALVE BS5153 (45 DEGREE)
MODEL FIG02



PRODUCTION STANDARDS

MODEL FIG02 I DN50 - DN300
PN10 - PN16

Design	BS 5153:1994, TYPE A
Flange	BS 4504
Tests	BS 6755
Pressure Class	PN 10/16
Corrosion Protection	Electrostatic Powder Epoxy

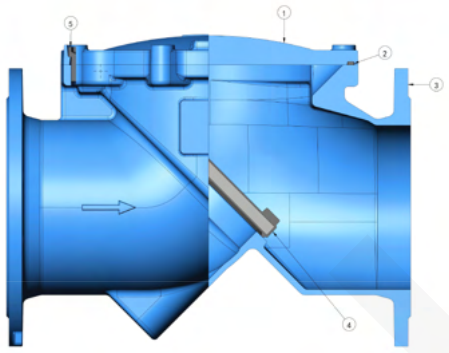

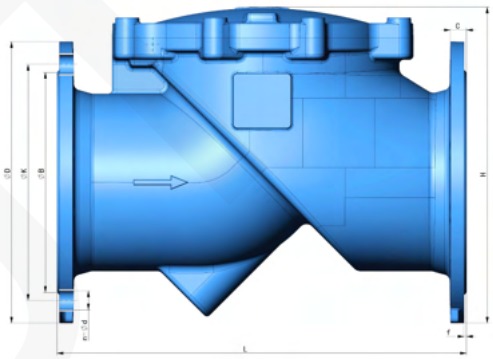

MATERIAL SELECTION

No	Items	Material	Standard
1	Bonnet	Ductile Iron	EN GJS 500-7
2	Gasket	Rubber	EPDM
3	Body	Ductile Iron	EN GJS 500-7
4	Valve plate	CS covered with rubber	Commercial and EPDM
5	In Hex Bolt	Stainless steel	AISI 420

DIMENTIONS

DN(mm)	L	H	ØB	ØK	ØD	n-Ød	C	f
50	203	167	99	125	165	4-Ø19	19	3
65	216	185	118	145	185	4-Ø19	19	3
80	241	200	132	160	200	8-Ø19	19	3
100	292	227	156	180	220	8-Ø19	19	3
125	330	255	184	210	250	8-Ø19	19	3
150	356	299	211	240	285	8-Ø23	19	3
200	495	383	266	295	340	12-Ø23	20	3
250	622	468	319	355	405	12-Ø28	22	3
300	700	532	370	410	460	12-Ø28	24.5	4
350	787	555	429	470	520	16-Ø28	26.5	4
400	914	632	480	525	580	12-Ø31	28	4

SWING CHECK VALVE BS5153 (45 DEGREE)
MODEL FIG02



PRODUCTION STANDARDS

MODEL FIG02 I DN50 - DN300
PN10 - PN16

Design	BS 5153:1994, TYPE A
Flange	BS 4504
Tests	BS 6755
Pressure Class	PN 10/16
Corrosion Protection	Electrostatic Powder Epoxy

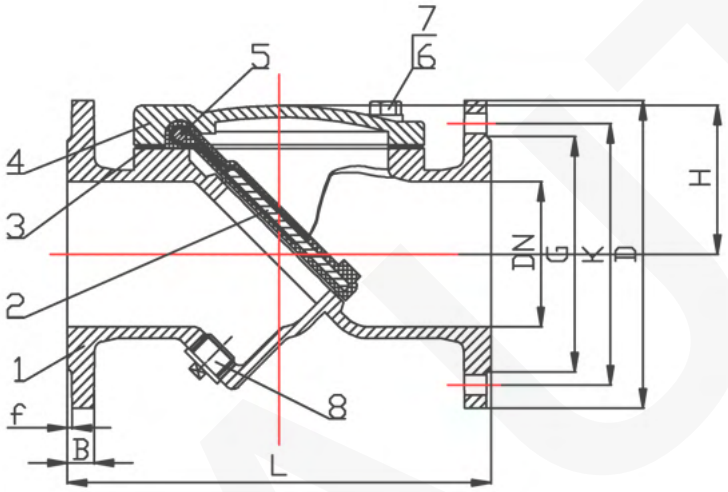

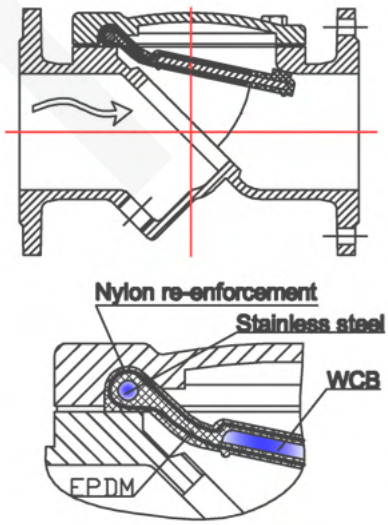

DIMENTIONS

DN	L	D	K		G		B	f	N-d		H
			PN10	PN16	PN10	PN16			PN10	PN16	
450	965	640	565	585	528	546	30	4	20-28	20-31	455
500	1067	715	620	650	582	609	31.5	5	20-28	20-34	
600	1219	840	725	770	682	720	36	5	20-31	20-37	

Y-STRAINER DIN3202-F1
MODEL FIG03 | DN50-DN300



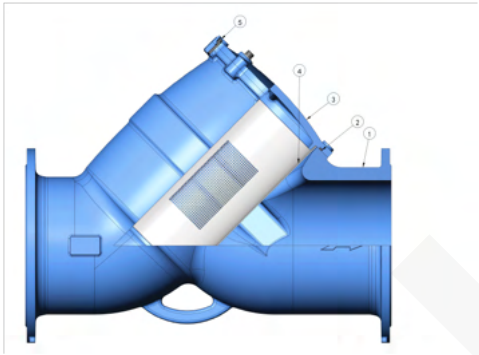

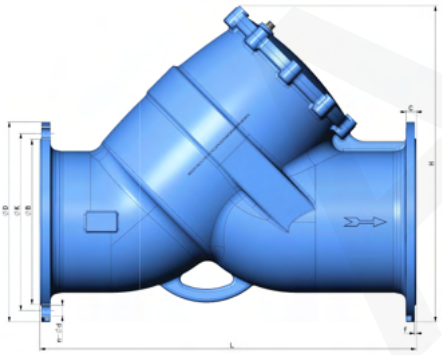

PRODUCTION STANDARDS

MODEL FIG03 I DN50 - DN300
PN10 - PN16

Design	EN 674, DIN 3202F1
Flange	BS 4504
Tests	DIN 3230
Pressure Class	PN 10/16
Corrosion Protection	Electrostatic Powder Epoxy

VALUE TEST PRESSURE (BAR)

Nominal Pressure	PN10	PN16	PN25
Shell Pressure	15	24	37.5
Seal Pressure	11	17.6	27.5
Max.Temp	70 C		

MATERIAL SELECTION

No	Items	Material	Standard
1	Body	Ductile Iron	EN GJS 500-7
2	O-ring	Rubber	EPDM
3	Bonnet	Ductile Iron	EN GJS 500-7
4	Filter screen	Stainless steel	SS304
5	In Hex Bolt	Stainless steel	SS304

DIMENTIONS

DN(mm)	L	H	ØB	ØK	ØD	n-Ød	C	f
50	230	220	99	125	165	4-Ø19	50	50
65	290	260	118	145	185	4-Ø19	65	65
80	310	280	132	160	200	8-Ø19	80	80
100	350	310	156	180	220	8-Ø19	100	100
125	400	339	184	210	250	8-Ø19	125	125
150	480	430	211	240	285	8-Ø23	150	150
200	600	515	266	295	340	12-Ø23	200	200
250	730	630	319	355	405	12-Ø28	250	250
300	850	715	370	410	460	12-Ø28	300	300

Y-STRAINER DIN3202-F1

MODEL FIG03 | DN350-DN800



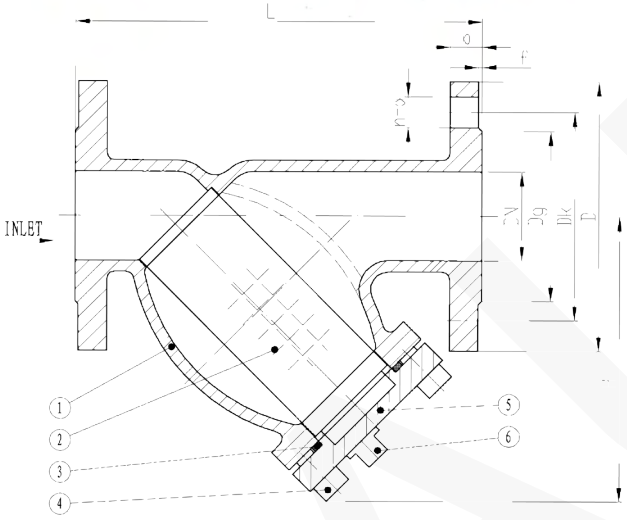

VALUE TEST PRESSURE (BAR)

Nominal Pressure	PN10	PN16	PN25
Shell Pressure	15	24	37.5
Seal Pressure	11	17.6	27.5
Max.Temp	70 C		

MATERIAL SELECTION

No	Items	Material	Standard
1	Body	Ductile Iron	GGG50
2	Screen	Stainless Steel	SS304
3	Body Gasket	Graphite	
4	Bolts	Steel	RRST37-2
5	Cover	Ductitle Iron	GGG50
6	Plug	Ductitle Iron	GGG50

DIMENTIONS

DN(mm)	L	Dg	Dk	D	H	n-Ød	b	f
350	980	429	470	520	858	16-28	36	4
400	1100	480	525	580	1135	16-31	38	4
450	1200	548	585	640	1158	20-31	40	4
500	1250	609	650	715	1265.5	20-34	42	4
600	1450	720	770	840	1498	20-37	48	5
700	1650	793	840	910	1645	24-37	54	5
800	1850	900	950	1025	1896	24-39	58	5

FOOT VALVE (FLANGED END)
MODEL FIG04





PRODUCTION STANDARDS

MODEL FIG04 I DN50 - DN400
PN10 - PN16

Design	EN 1092-2
Flange	BS 4504
Tests	BS 6755
Pressure Class	PN 10/16
Corrosion Protection	Electrostatic Powder Epoxy

MATERIAL SELECTION

No	Items	Material	Standard
1	Body	Ductitle Iron	GGG50
2	Guide seat	Ductile Iron	GGG50
3	Gasket	PTFE	Commercial
4	Lead screw	Stainless Steel	SS420
5	Spring	Stainless Steel	SS304
6	Valve plate	Ductile iron covered with rubber	DI + EPDM
7	Sealing ring	Brass	
8	Washer	Stainless Steel	CZ122
9	Nut	Stainless Steel	SS420
10	Filter screen	Stainless Steel	SS304
11	Bolt	Stainless Steel	SS420
12	Washer	Stainless Steel	SS420

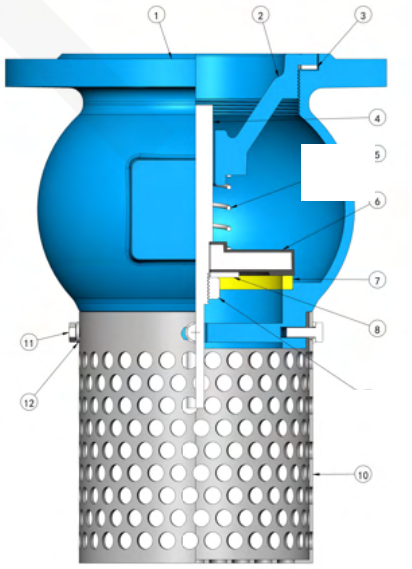

DIMENTIONS

DN(mm)	H	ØB	ØK	ØD	n-Ød	C+/-2,5	f
50	166	100	125	165	4-Ø19	19	3
65	201	120	145	185	4-Ø19	19	3
80	221	135	160	200	8-Ø19	19	3
100	265	156	180	220	8-Ø19	19	3
125	300	186	210	250	8-Ø19	19	3
150	360	212	240	285	8-Ø23	19	3
200	470	268	295	340	12-Ø23	20	3
250	568	318	355	405	12-Ø28	24.5	3
300	653	373	410	460	12-Ø28	26.5	3
350	670	438	470	520	16-Ø28	27	3
400	720	490	525	580	16-Ø31	28	3

RUBBER EXPANSION JOINT
MODEL FIG05

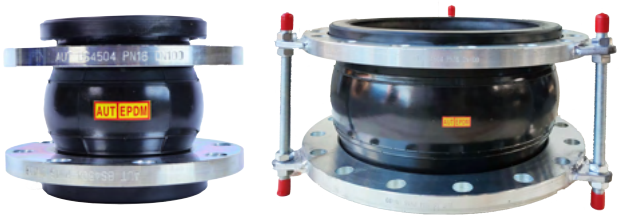

PRODUCTION STANDARDS

MODEL FIG05 I DN50 - DN600
PN10 - PN16

Flange	BS4504
Pressure Class	PN 10/16
Corrosion Protection	Electrostatic Powder Epoxy

MATERIAL SELECTION DN40 - DN300

No	Name	Material
1	Tube	EPDM
2	Reinfocing Fabric	Nylon
3	Pressurized Ring	Steel wire rope
4	Flange	Carbon Steel

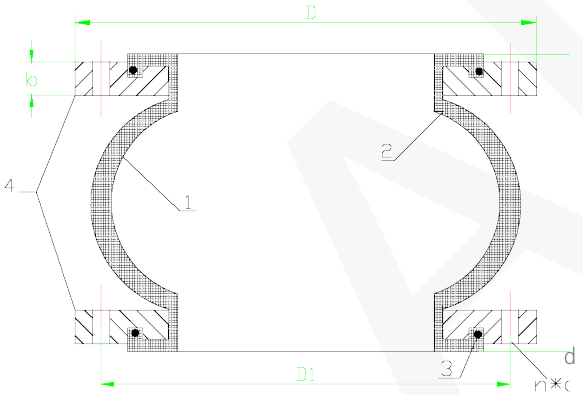

MATERIAL SELECTION DN350 - DN600

No	Name	Material
1	Body	EPDM
2	Body Card	Nylon card fabric
3	Ring	Steel wire rope
4	Flange	Carbon Steel
5	Control units	Carbon Steel

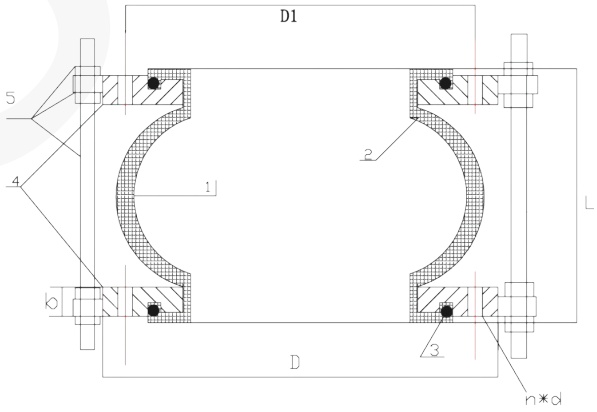

DIMENTIONS

DN(mm)	D	D1	n*d	b	L	Elongate	Compress
40	150mm	110	18mm*4	14	95	6mm	10mm
50	153mm	125	18mm*4	14	105	7mm	10mm
65	173mm	145	18mm*4	15	115	7mm	13mm
80	188mm	160	18mm*8	16	135	8mm	15mm
100	210mm	180	18mm*8	16	150	10mm	19mm
125	238mm	210	18mm*8	17	165	12mm	19mm
150	274mm	240	22mm*8	17	180	12mm	20mm
200	332mm	295	23mm*12	18	210	12mm	25mm
250	396mm	355	26mm*12	22	230	14mm	25mm
300	450mm	410	26mm*12	22	245	14mm	25mm
350	515mm	470	26mm*16	23	255	16mm	25mm
400	575mm	525	30mm*16	26	255	16mm	25mm
450	635mm	585	30mm*20	26	255	16mm	25mm
500	710mm	650	33mm*20	28	255	16mm	25mm
600	835mm	770	36mm*20	30	260	16mm	25mm

CHECK VALVE LEVER &WEIGHT TYPE METAL SEAT DIN3202-F6

MODEL FIG021



PRODUCTION STANDARDS

MODEL FIG021 I DN50 - DN300
PN10 - PN16

Flange drilled	EN1092-2
Face to Face	BS 5153
Pressure Class	PN 10/16
Corrosion Protection	Electrostatic Powder Epoxy

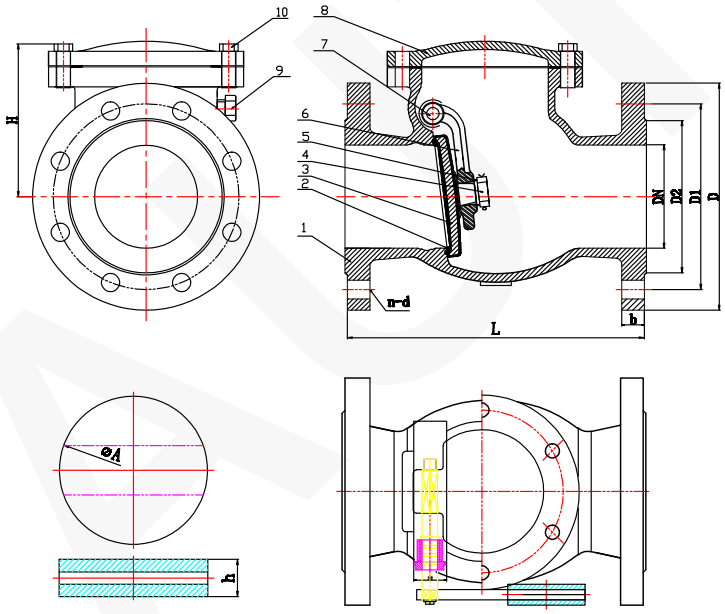

DIMENTIONS

DN	L	D	H	D1	D2	b	n-d
50	203	165	137	125	102	14	4-18
65	216	185	147	145	122	14	4-18
80	241	200	159	160	138	17	8-18
100	292	220	180	180	158	17	8-18
123	330	250	203	210	188	19	8-18
150	356	285	223	240	212	19	8-22
200	495	340	258	295	268	22	12-22
250	622	405	290	355	320	23	12-28
300	696	460	325	410	378	26	12-28

MATERIAL SELECTION

Item	Name	Qty	Material
1	Body	1	GGG50
2	Disc Seat	1	Brass
3	Disc	1	GGG50
4	Cap	1	40Cr
5	Washer	1	40Cr
6	Plug	1	GGG50
7	Plug axie	1	2Cr13
8	Bonet	1	GGG50
9	Bolt	1	40Cr
10	Bolt	4	40Cr

CHECK VALVE LEVER &WEIGHT TYPE METAL SEAT DIN3202-F6

MODEL FIG021



PRODUCTION STANDARDS

MODEL FIG021 I DN250 - DN400
PN10 - PN16

Medium	Water
Shell test	2.4 Mpa
Seal test	1.76 Mpa
Temperature	0~80

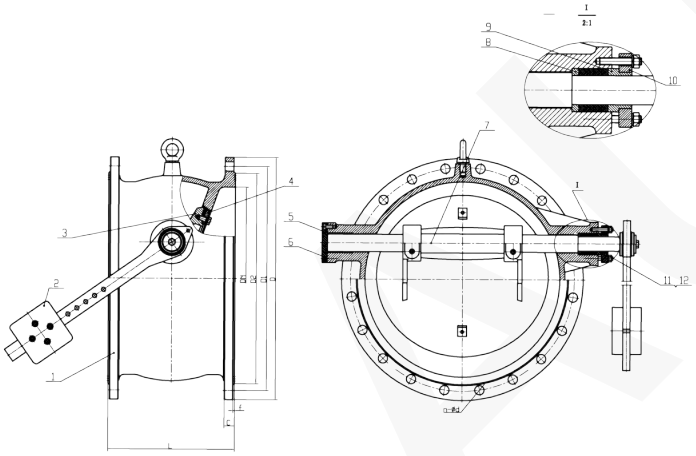

MATERIAL SELECTION

Item	Name	Qty	Material
1	Body	1	Ductile Iron
2	Lever	1	Q235A
3	Disc	1	Ductile Iron
4	Sealing	1	NBR
5	Bearing	1	Brass
6	Cap	1	SS304
7	Stem	1	2Cr13
8	Packing	1	NBR
9	Bushing	1	SS304
10	Gland	1	SS304
11	Bolt	1	A2-70
12	Nut	1	A2-70

DIMENTIONS

DN	L	D	D1	D2	c	f	n-d
250	250	405	355	319	26	3	12-28
300	270	460	410	370	28	4	12-28
350	290	520	470	429	30	4	16-28
400	310	580	525	480	32	4	16-31

WAFER CHECK VALVE
MODEL FIG022

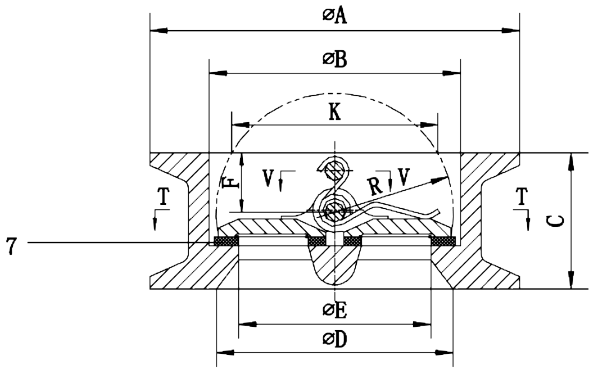

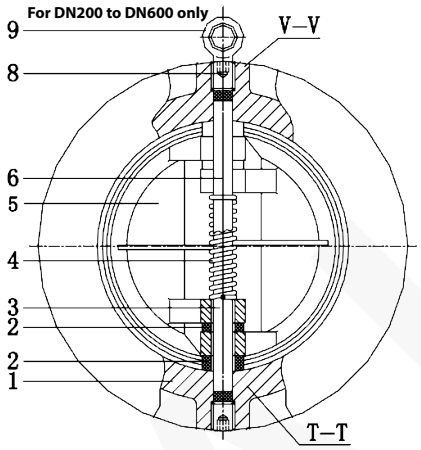

PRODUCTION STANDARDS

MODEL FIG022 I DN50 - DN600
PN10 - PN16



No	Part name	Material
1	Body	DI
2	Washer	PTFE
3	Lower Shaft	SS410
4	Spring	SS304
5	Disc	CF8
6	Upper Shaft	SS410
7	Seat	EPDM
8	Thread Plug	Carbon Steel
9	Lifting Eyebolt	Carbon Steel

DIMENTIONS

SIZE	A	B	C	D	E	F	R	K
50	107	65	43	59	48	18	29.7	47.4
65	127	80	46	78	60	20	37.1	62.6
80	142	94	64	91	70	28	44.4	68.9
100	162	117	64	110	88	27	55.7	97.1
125	192	145	70	142	115	30	67.7	121.4
150	218	170	76	170	134	31	78.6	144.6
200	273	224	89	22	182	33	103.9	197.1
250	328	265	114	264	223	50	127.1	233.7
300	378	310	114	310	260	43	148.3	238.8
350	438	360	127	360	300	51	174.4	333.6
400	489	410	140	414	355	57	197.4	378.1
450	539	450	152	450	382	64	217.2	415.1
500	594	505	152	505	435	58	242.8	471.6
600	695	624	178	605	536	73	296.4	574.5

SILLENT CHECK VALVE
MODEL FIG023



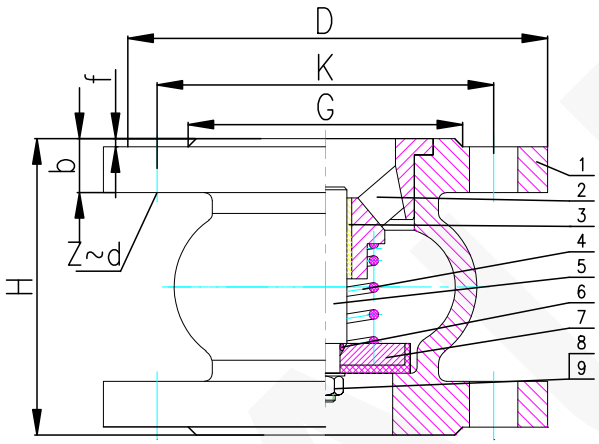

PRODUCTION STANDARDS

MODEL FIG023 I DN40 - DN300
PN10 - PN16

Design	ISO Standard
Test	BS6755
Flange	BS4504

Nominal pressure		1.0MPa	1.6 MPa
Test Pressure	Shell	15.0Bar	24.0Bar
	Seal	11.0Bar	17.6Bar

No	Part name	Material
1	Body	GGG50
2	Bonnet	GGG50
3	Brush	BRASS
4	Spring	SS304
5	Guiding Stem	X20Cr13
6	O-ring	NBR
7	Disc	GGG50+EPDM
8	Nut	SS201
9	Washer	SS201

DIMENTIONS

DN(mm)	D	K	G	H	b	f	Z-d
		PN10/16	PN10/16				PN10/16
40	150	110	88	100	19	3	4-Ø19
50	165	125	100	100	19	3	4-Ø19
65	185	145	120	120	19	3	4-Ø19
80	200	160	135	140	19	3	8-Ø19
100	220	180	156	170	19	3	8-Ø19
125	250	210	186	200	19	3	8-Ø19
150	285	240	212	230	19	3	8-Ø23
200	340	295	268	300	20	3	8-Ø23/12-Ø23
250	405	350/355	318	370	24.5	3	12-Ø23/12-Ø28
300	460	400/410	373	410	26.5	3	12-Ø23/12-Ø28

PRESSURE RELIEF VALVE
MODEL FIG08



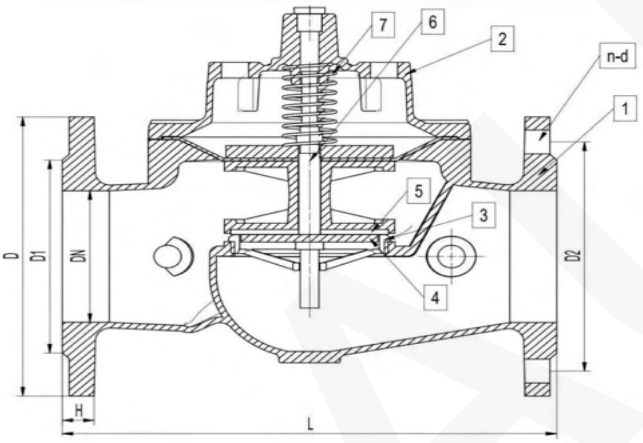

PRODUCTION STANDARDS

MODEL FIG08 I DN50 - DN300
PN10 - PN16

Design	EN 1074-5
Flange	BS 4504
Test	BS 6755

MATERIAL SELECTION

No	Items	Material
1	Body	Ductile Iron
2	Bonet	Ductile Iron
3	Seat	SS304
4	Gasket	EPDM
5	Gland	Ductile Iron
6	Stem	SS410
7	Spring	SS304
8	Pilot Valve	Stainless Steel

Reference Standard	
Medium	Water
Temperature	0-80ºC
Seal Test	11 bar / 17.6 bar
Shell Test	15/ bar / 24 bar
PN	PN10 / 16 bar

DIMENTIONS

Size	L	PN10			PN16			D2
DN		D	D1	N-d	D	D1	N-d	
50	235	165	125	4-Ø19	165	125	4-Ø19	99
65	240	185	145	4-Ø19	185	145	4-Ø19	118
80	290	200	160	8-Ø19	200	160	8-Ø19	132
100	305	220	180	8-Ø19	220	180	8-Ø19	156
125	340	250	210	8-Ø19	250	210	8-Ø19	184
150	400	285	240	8-Ø23	285	240	8-Ø23	211
200	425	340	295	12-Ø23	340	295	12-Ø23	266
250	505	395	355	12-Ø23	405	355	12-Ø28	319
300	600	445	400	12-Ø23	460	410	12-Ø26	370

FLOATING VALVE
MODEL FIG09



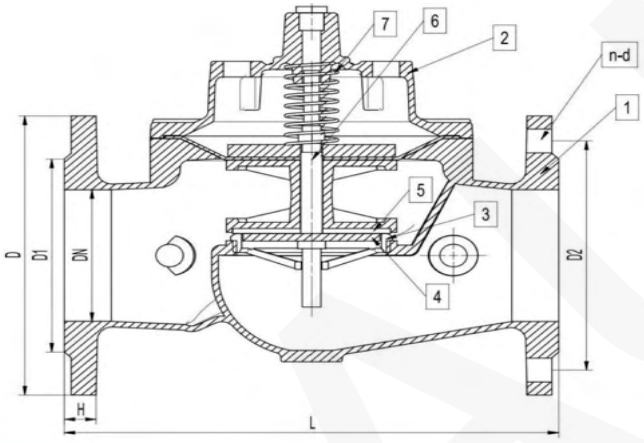

PRODUCTION STANDARDS

MODEL FIG09 I DN50 - DN300
PN10 - PN16

Design	EN 1074-5
Flange	BS 4504
Test	BS 6755

MATERIAL SELECTION

No	Items	Material
1	Body	Ductile Iron
2	Bonet	Ductile Iron
3	Seat	SS304
4	Gasket	EPDM
5	Gland	Ductile Iron
6	Stem	SS410
7	Spring	SS304
8	Float ball	Stainless Steel

Reference Standard	
Medium	Water
Temperature	0-80ºC
Seal Test	11 bar / 17.6 bar
Shell Test	15/ bar / 24 bar
PN	PN10 / 16 bar

DIMENTIONS

Size	L	PN10			PN16			D2
DN		D	D1	N-d	D	D1	N-d	
50	235	165	125	4-Ø19	165	125	4-Ø19	99
65	240	185	145	4-Ø19	185	145	4-Ø19	118
80	290	200	160	8-Ø19	200	160	8-Ø19	132
100	305	220	180	8-Ø19	220	180	8-Ø19	156
125	340	250	210	8-Ø19	250	210	8-Ø19	184
150	400	285	240	8-Ø23	285	240	8-Ø23	211
200	425	340	295	12-Ø23	340	295	12-Ø23	266
250	505	395	355	12-Ø23	405	355	12-Ø28	319
300	600	445	400	12-Ø23	460	410	12-Ø26	370

PRESSURE REDUCING VALVE
MODEL FIG10



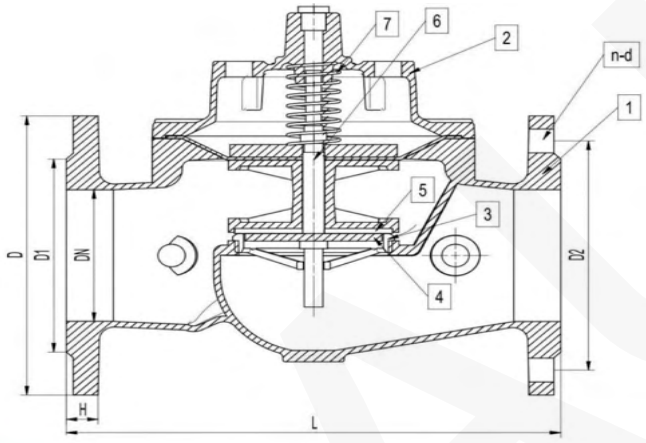

PRODUCTION STANDARDS

MODEL FIG10 I DN50 - DN300
PN10 - PN16

Design	EN 1074-5
Flange	BS 4504
Test	BS 6755

MATERIAL SELECTION

No	Items	Material
1	Body	Ductile Iron
2	Bonet	Ductile Iron
3	Seat	SS304
4	Gasket	EPDM
5	Gland	Ductile Iron
6	Stem	SS410
7	Spring	SS304
8	Pilot Valve	Stainless Steel

Reference Standard	
Medium	Water
Temperature	0-80ºC
Seal Test	11 bar / 17.6 bar
Shell Test	15/ bar / 24 bar
PN	PN10 / 16 bar

DIMENTIONS

Size	L	PN10			PN16			D2
DN		D	D1	N-d	D	D1	N-d	
50	235	165	125	4-Ø19	165	125	4-Ø19	99
65	240	185	145	4-Ø19	185	145	4-Ø19	118
80	290	200	160	8-Ø19	200	160	8-Ø19	132
100	305	220	180	8-Ø19	220	180	8-Ø19	156
125	340	250	210	8-Ø19	250	210	8-Ø19	184
150	400	285	240	8-Ø23	285	240	8-Ø23	211
200	425	340	295	12-Ø23	340	295	12-Ø23	266
250	505	395	355	12-Ø23	405	355	12-Ø28	319
300	600	445	400	12-Ø23	460	410	12-Ø26	370

SURGE PATICIPATING VALVE
MODEL FIG088



PRODUCTION STANDARDS

MODEL FIG088 I DN50 - DN300
PN10 - PN16

Design	EN-1074
Test	EN-12266-1, Class A
Flange	EN-1092-2, BS4504

FEATURES

- Simple and reliable design
- Easy installation and maintenance
- Low resistance and high flow capacity
- No slam operation
- Closes slowly To prevent subsequent surges

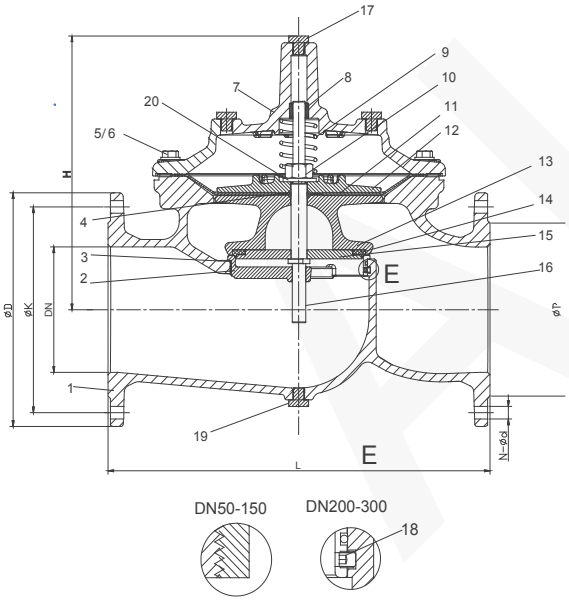

MATERIAL SELECTION

No	Parts	Materrial	Standard
1	Body	Ductlie Iron	GJS 500-7
2	Seat	Stainless Steel	AISI 304/316
3	O-ring	Rubber	NBR NBR
4	O-ring	Rubber	A2/A4
5	Bolt	Stainless Steel	A2/A4
6	Washer	Stainless Steel	GJS 500-7
7	Bonnet	Ductile Iron	C61900
8	Bush	Bronze	AISI 304/316
9	Spring	Stainless Steel	A4
10	Caulking Nut	Stainless Steel	EPDM +Nylon
11	Diaphragm	Nylon Reinforced Rubber	Fabric
12	Fixing holder	Ductlie Iron	GJS 500-7
13	Disc Holder	Ductlie Iron	I GJS 500-7
14	Seal	Rubber	EPDM
15	Seat Retainer	Stainless Steel	AISI 304/316
16	Stem	Stainless Steel	AISI 304/316
17	Plug	Stainless Steel	AISI 304/316
18	Screw	Stainless Steel	A2/A4
19	Plug	Stainless Steel	A2/A4
20	Washer	Stainless Steel	A2/A4

DIMENTIONS

DN(mm)	L	H	ØD	ØK	n-Ød	ØB
50	230	177	165	125	4-Ø19	Ø99
65	290	202	185	145	4-Ø19	Ø118
80	310	219	200	160	8-Ø19	Ø132
100	350	243	220	180	8-Ø19	Ø156
125	400	243	250	210	8-Ø19	Ø156
150	480	333	285	240	8-Ø23 8-Ø23	Ø211
200	600	428	340	295	8-Ø23 12-Ø23	Ø266
250	730	478	405	350 355	12-Ø23 12-Ø28	Ø319
300	850	538	460	400 410	12-Ø23 12-Ø28	Ø370

WAFER BUTTERFLY VALVE
MODEL FIG061 - FIG062



FIG062 FIG061

MATERIAL SELECTION

NO	Parts	Materials
1	Body	DI
2	Stem	SS410
3	Disc	SS304
4	Seat	EPDM
5	Bushing	Polymer
6	Tapper pin	SS304
7	O ring	EPDM
8	Lever	Aluminum/DI
9	Wormgear	DI

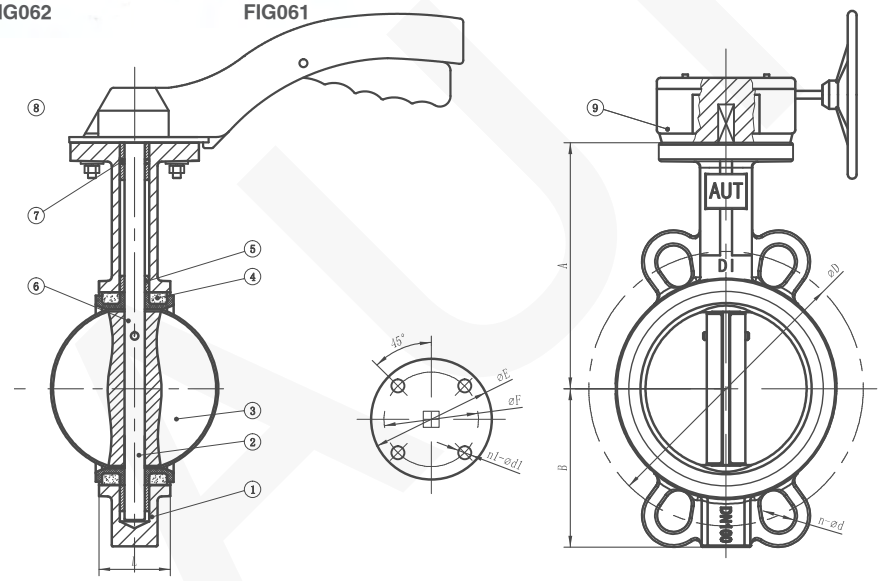

DIMENTIONS

Size		L	A	B	IOS5211				PN10		PN16	
mm	in				Top flange	ØE	ØF	n1-Ød1	ØD	n-Ød	ØD	n-Ød
50	2	42	132	72	F05	65	50	4-8	125	4-18	125	4-18
65	2.5	25	138	82	F05	65	50	4-8	145	4-18	145	4-18
80	3	25	153	96	F05	75	50	4-8	160	8-18	160	8-18
100	4	52	169	109	F07	90	70	4-10	180	8-18	180	8-18
125	5	56	183	125	F07	90	70	4-10	210	8-18	210	8-18
150	6	56	195	137	F07	90	70	4-10	240	8-22	240	8-22
200	8	60	235	170	F10	125	102	4-12	295	8-22	295	12-22
250	10	66	267	207	F10	125	102	4-12	350	12-22	355	12-26
300	12	77	305	236	F10	125	102	4-12	400	12-22	410	12-26

WAFER BUTTERFLY VALVE
MODEL FIG061 - FIG062



PRODUCTION STANDARDS

MODEL FIG061-062 I DN50 - DN600
PN10 - PN16

Design	BS Standard
Flange	BS Standard
Face to Face	SO 5752 series 20
Tests	ISO 6755
Pressure Class	PN 10/16
Corrosion Protection	Electrostatic Powder Epoxy

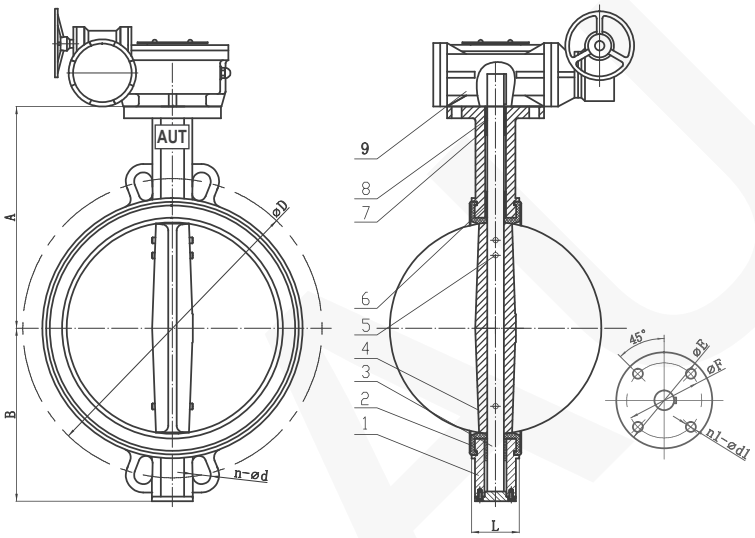

MATERIAL SELECTION

NO	Parts	Materials
1	Body	DI
2	Stem	EPDM
3	Diso	SS410
4	Seat	SS304
5	Bushing	SS304
6	Tapper pin	Polymer
7	O ring	Polymer
8	Lever	EPDM
9	Wormgear	DI

DIMENTIONS

Size		L	A	B	IOS6211				PN10		PN16		150LB		JIS 10K	
mm	in				Top flange	ØE	ØF	n1-Ød1	ØD	n-Ød	ØD	n-Ød	ØD	n-Ød	ØD	n-Ød
350	14	78	336	265	F10	125	102	4-12	460	16-22	470	16-26	476.3	12-29	55	16-25
400	16	86	405	329	F14	175	140	4-18	515	16-26	525	16-30	539.5	16-29	510	16-27
450	18	102	415	355	F14	175	140	4-18	565	20-26	585	20-30	577.9	16-32	565	20-27
500	20	127	460	390	F14	175	140	4-18	620	20-26	650	20-33	635	20-32	620	20-27
600	24	154	535	435	F16	210	165	4-22	725	20-30	770	20-36	749.3	20-35	730	24-33

FLANGE BUTTERFLY VALVE
MODEL FIG063 | DN50-DN350



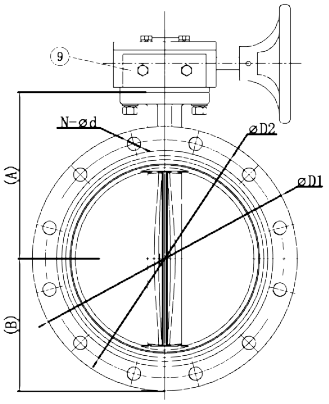

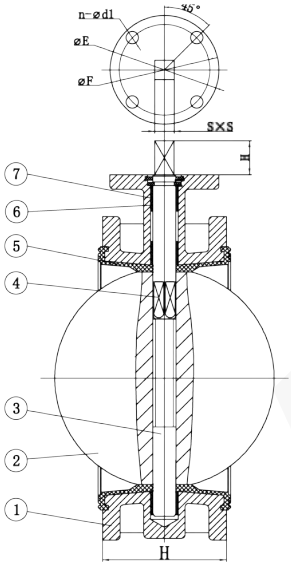

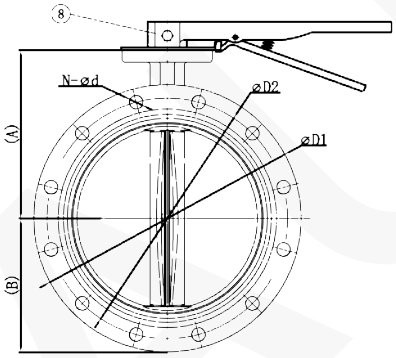

PRODUCTION STANDARDS

MODEL FIG063 I DN400 - DN1200
PN10 - PN16

Design	BS 5155
Flange	DIN 2501
Face to Face	DNI 3202 - 1K
Tests	DIN 3230 PART 3
Pressure Class	PN 10/16
Corrosion Protection	Electrostatic Powder Epoxy

MATERIAL SELECTION

No	Name	Material
1	Body	DI
2	Disc	CF8
3	Bottom shaft	SS410
4	Upper shaft	SS304
5	Seat	EPDM
6	Bushing	Polymer
7	O ring	EPDM
8	Lever	DI
9	Wormgear	DI

DIMENTIONS

DN	A	B	L	PN10			PN16			ØE	ØF	n-Ød1	H	S
				ØD1	ØD2	N-Ød	ØD1	ØD2	N-Ød					
DN50	130	83	108	165	125	4-Ø19	165	125	4-Ø19	65	50	4-Ø8	25	9
DN65	140	93	112	185	145	4-Ø19	185	145	4-Ø19	65	50	4-Ø8	25	9
DN80	149	100	114	200	160	8-Ø19	200	160	8-Ø19	65	50	8-Ø8	25	9
DN100	156	110	127	220	180	8-Ø19	220	180	8-Ø19	90	70	4-Ø10	28	11
DN125	177	125	140	250	210	8-Ø19	250	210	8-Ø19	90	70	4-Ø10	28	14
DN150	200	143	140	285	240	8-Ø23	285	240	8-Ø23	90	70	4-Ø10	28	14
DN200	225	170	152	340	295	8-Ø23	340	295	12-Ø23	125	102	4-Ø12	35	17
DN250	280	203	165	395	350	12-Ø23	405	355	12-Ø23	125	102	4-Ø12	40	22
DN300	309	230	178	445	400	12-Ø23	460	410	12-Ø23	125	102	4-Ø12	40	22
DN350	325	260	190	505	460	16-Ø23	520	470	16-Ø28	125	102	4-Ø12		

FLANGE BUTTERFLY VALVE
MODEL FIG063 | DN400-DN1200



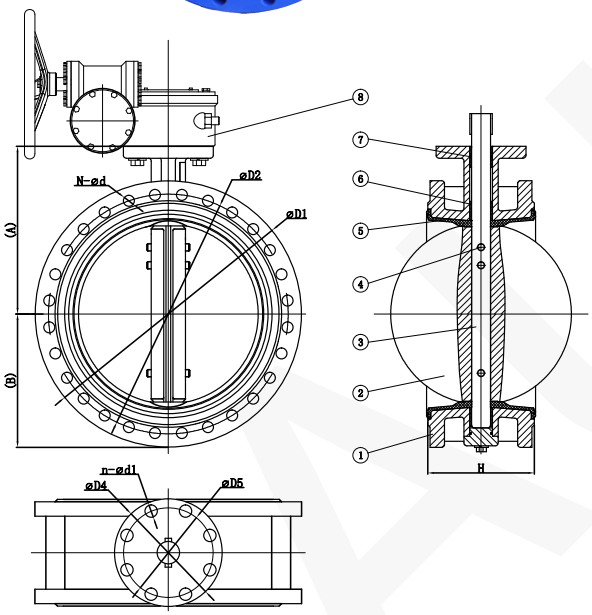

MATERIAL SELECTION

No	Name	Material
1	Body	DI
2	Disc	CF8
3	Stem	SS410
4	Tapper pin	SS304
5	Seat	EPDM
6	Bushing	Polymer
7	O ring	EPDM
8	Gear box	DI

Nominal pressure		PN10	PN16
Test pressure	Shell test	1.5 Mpa	2.4 Mpa
	Sealing test	1.1 Mpa	1.76 Mpa
Maximum working temperature		-10ºC to +110ºC	
Suitable Media		Water	

DIMENTIONS

DN(mm)	Inch			PN16				ISO5211		
		H+/-4	A	B	ØD1	ØD2	N-Ød	ØD4	ØD5	N-Ød1
DN400	16	216	370	267	580	525	16φ30	175	140	4-**Ø18**
DN450	18	222	400	300	640	585	20φ30	175	140	4-**Ø18**
DN500	20	229	500	390	715	650	20φ33	175	140	4-**Ø18**
DN600	24	267	522	413	840	770	20φ36	210	165	4-**Ø22**
DN700	28	292	570	480	910	840	24φ36	300	254	8-**Ø18**
DN800	32	318	630	515	1025	950	24φ39	300	254	8-**Ø18**
DN900	36	330	690	560	1125	1050	28φ39	300	254	8-**Ø18**
DN1000	40	410	745	635	1255	1170	28φ42	300	254	8-**Ø18**
DN1200	48	470	925	775	1485	1390	32φ48	350	298	8-**Ø22**

WAFER BUTTERFLY VALVE WITH SIGNAL GEARBOX
MODEL FIG065

PRODUCTION STANDARDS

MODEL FIG065 I DN50 - DN300
PN10 - PN16

Nominal test	1.6	MPa
Shell Tesst Pressure (Hydraulic)	2.4	
Shell Tesst Pressure (Hydraulic)	1.76	
Design Tempreture	-10ºC ~ 100ºC	
Applicable Media	Water, Oil, Gas	
Excutive Standard		
Design $ Manufacture	API609	
Face to face	API609	
End Flange	EN1092-1 PN10/PN16	
Inspection & Test	API598	



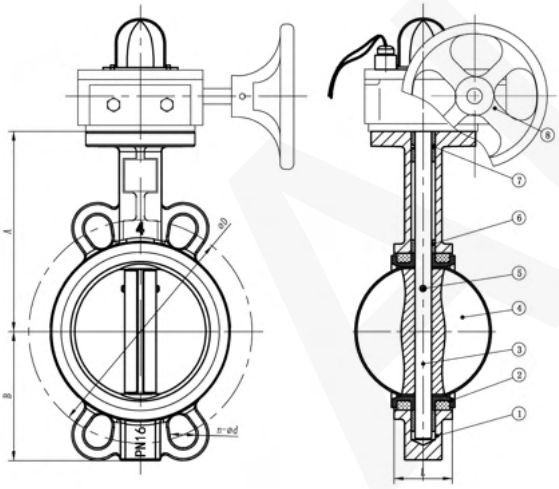

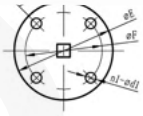

MATERIAL SELECTION

No	Name	Material
1	Body	DI
2	Disc	CF8
3	Stem	SS410
4	Tapper pin	SS304
5	Seat	EPDM
6	Bushing	Polymer
7	O ring	EPDM
8	Gear box	DI

Size		L	A	B	H	IOS5211				PN10		PN16	
mm	inch					Top Flange	ØE	ØC1	n1-Ød1	ØD	n-Ød	ØD	n-Ød
50	2	42	129	71	9	F05	65	50	4-8	125	4-19	125	4-19
65	2.5	45	138.5	82.5	9	F05	65	50	4-8	145	4-19	145	4-19
80	3	45.5	146	96	9	F05	65	50	4-8	160	8-19	160	8-19
100	4	51.5	164.5	110.5	11	F07	90	70	4-10	180	8-19	180	8-19
125	5	55	180.5	127.5	14	F07	90	70	4-10	210	8-19	210	8-19
150	6	55.5	201	142	14	F07	90	70	4-10	240	8-23	240	8-23
200	8	60	235	169	17	F10	125	102	4-12	295	8-23	295	12-23
250	10	65.5	267	207	22	F10	125	102	4-12	350	12-23	355	12-23
300	12	78	320	243	22	F10	125	102	4-12	400	12-23	410	12-23

BUTTERFLY VALVE WITH ELECTRIC ACTUATOR
MODEL FIG066

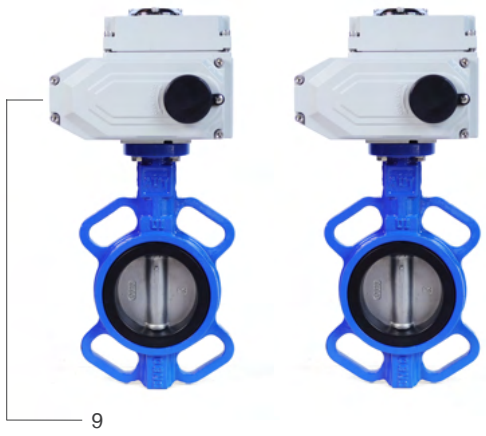

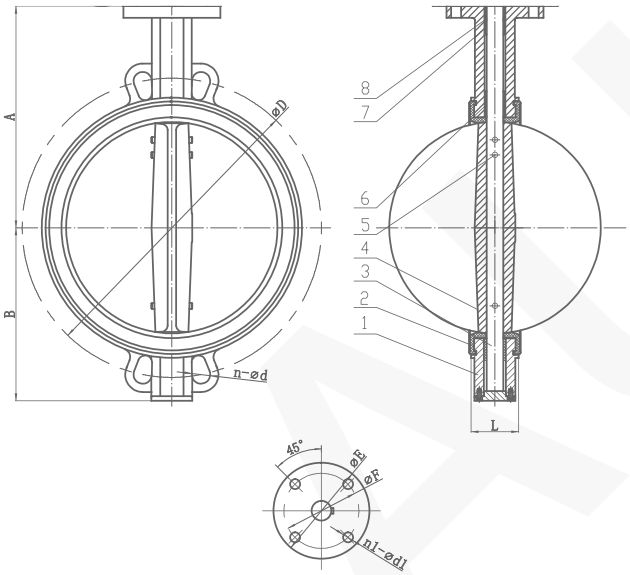

PRODUCTION STANDARDS

MODEL FIG066 I DN50 - DN300
PN10 - PN16

Design	BS STANDARD
Face to Face	ISO5752 SERIES 20
Test	BS6755

MATERIAL SELECTION

NO	Parts	Materials
1	Body	DI
2	Stem	EPDM
3	Disc	SS410
4	Seat	SS304
5	Bushing	SS304
6	Tapper pin	Polymer
7	O ring	Polymer
8	Lever	EPDM
9	Electric Actuator	

VALUE TEST PRESSURE (BAR)

Nominal Pressure	PN10	PN16
Shell Pressure	15	24
Seal Pressure	11	17.6
Max.Temp	70 C	

DIMENTIONS

DN	A	B	L	ØD		n-Ød	ISO5211			
							Top Flange	ØE	ØF	n1-Ød1
50	132	72	42	125	125	4 - 18 / 4 - 18	F05	65	50	4 - 8
65	138	82	45	145	145	4 - 18 / 4 - 18	F05	65	50	4 - 8
80	153	96	45	160	160	8 - 18 / 8 - 18	F05	65	50	4 - 8
100	169	109	52	180	180	8 - 18 / 8 - 18	F07	90	70	4 - 10
125	183	125	54	210	210	8 - 22 / 8 - 22	F07	90	70	4 - 10
150	195	137	56	240	240	8 - 22 / 8 - 22	F07	90	70	4 - 10
200	235	170	60	295	295	8 - 22 / 12 - 22	F10	125	102	4 - 12
250	267	207	66	350	355	12 - 22 / 12 - 26	F10	125	102	4 - 12
300	305	236	77	400	410	12 - 22 / 12 - 26	F10	125	102	4 - 12

SINGLE SPHERE AIR VALVE - FLANGE TYPE
MODEL FIG072



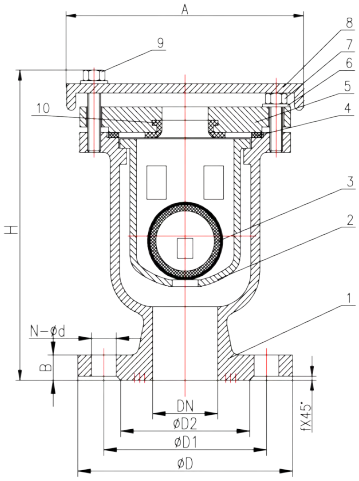

PRODUCTION STANDARDS

MODEL FIG072 I DN50 - DN150
PN10 - PN16

Design	ISO Standard
Face to Face	API 609. BS EN558. DIN3202
Flange	ANSI B16.5/BS 4504/EN 1092-2

Performance Specification		
Nominal Pressure	1.6MPa	2.5MPa
Suitable Medium	Water	
Test Pressure Shell	24.0 Bar	37.5 Bar
Test Pressure Seat	17.6 Bar	27.5 Bar
Working Pressure	≤ 80ºC	

MATERIAL SELECTION

No	Name	Qty	Material
1	Body	1	GGG50
2	Cup	1	GGG50
3	Floating Ball	1	ABS OR EPDM
4	Seal	1	EPDM
5	Cover	1	GGG50
6	Gasket	3	A2-70
7	Bolt	3	A2-70
8	Dust Cover	1	GGG50
9	Bolt	3	A2-70
10	Seal Ring	1	EPDM

DIMENTIONS

DN	A	ØD		ØD1		ØD2		f	N-Ød		B		H
		PN16	PN25	PN16	PN25	PN16	PN25		PN16	PN25	PN16	PN25	
DN50	182	Ø165	Ø165	Ø125	Ø125	Ø99	Ø99	3	4-Ø19	4-Ø19	19	19	231
DN65	182	Ø185	Ø185	Ø145	Ø145	Ø118	Ø118	3	4-Ø19	4-Ø19	19	19	231
DN80	237	Ø200	Ø200	Ø160	Ø160	Ø132	Ø132	3	8-Ø19	8-Ø19	19	19	289
DN100	237	Ø220	Ø235	Ø180	Ø190	Ø154	Ø156	3	8-Ø19	8-Ø23	19	19	289
DN125	195	Ø250	Ø270	Ø210	Ø220	Ø184	Ø188	3	8-Ø19	8-Ø28	19	19	350
DN150	295	Ø285	Ø300	Ø240	Ø250	Ø210	Ø218	3	8-Ø23	8-Ø28	19	20	350

THREAD AIR VALVE
MODEL FIG071



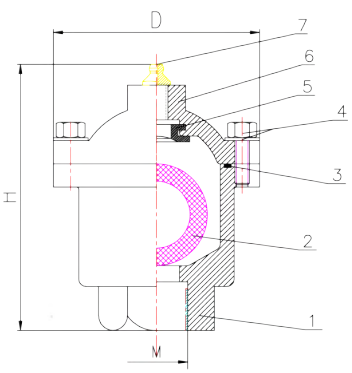

MATERIAL SELECTION

No	Name	Qty	Material
1	Body	1	GGG50
2	Ball Float	1	ABS
3	O ring	1	NBR
4	Bolt	-	A2-70
5	Seal Ring	1	EPDM
6	Bonnet	1	GGG50
7	Glib Tongued	1	Brass

M	D	H
1/2"-3/4"	Ø88	120
1"-1 1/4"	Ø105	145
1 1/2" - 2"	Ø128	172

DOUBLE SPHERE AIR VALVE - FLANGE TYPE
MODEL FIG073



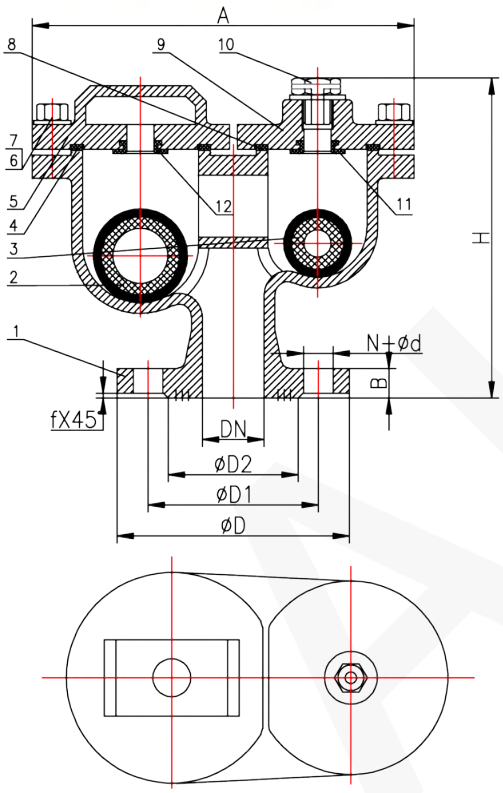

PRODUCTION STANDARDS

MODEL FIG073 I DN40 - DN200
PN10 - PN16

Design	ISO Standard
Face to Face	API 609. BS EN558. DIN3202
Flange	ANSI B16.5/BS 4504/EN 1092-2

MATERIAL SELECTION

No	Name	Qty	Material
1	Body	1	GGG50
2	Floating Ball 1	1	ABS OR EPDM
3	Floating Ball 2	1	ABS OR EPDM
4	Sealing	1	NBR/EPDM
5	Seal Cover	1	GGG50
6	Screw	6	SS201
7	Gasket	6	SS201
8	Sealing	1	NBR/EPDM
9	Seal Cover	1	GGG50
10	Air Relief	1	GALVANIZE
11	Seal Seat	1	NBR/EPDM
12	Seal Seat	1	NBR/EPDM

Performance Specification		
Nominal Pressure	1.6MPa	2.5MPa
Suitable Medium	Water	
Test Pressure Shell	24.0 Bar	37.5 Bar
Test Pressure Seat	17.6 Bar	27.5 Bar
Working Pressure	≤ 80ºC	

DIMENTIONS

DN	A	ØD		ØD1		ØD2		f	N-Ød		B		H
		PN16	PN25	PN16	PN25	PN16	PN25		PN16	PN25	PN16	PN25	
DN40	250	Ø150	Ø150	Ø110	Ø110	Ø84	Ø84	3	4-Ø19	4-Ø19	19	19	208
DN50	250	Ø165	Ø165	Ø125	Ø125	Ø99	Ø99	3	4-Ø19	4-Ø19	19	19	208
DN65	250	Ø185	Ø185	Ø145	Ø145	Ø118	Ø118	3	4-Ø19	8-Ø19	19	19	208
DN80	325	Ø200	Ø200	Ø160	Ø160	Ø132	Ø132	3	8-Ø19	8-Ø19	19	19	250
DN100	325	Ø220	Ø235	Ø180	Ø190	Ø154	Ø156	3	8-Ø19	8-Ø23	19	19	250
DN125	440	Ø250	Ø270	Ø210	Ø220	Ø184	Ø188	3	8-Ø19	8-Ø28	19	19	344
DN150	4440	Ø285	Ø300	Ø240	Ø250	Ø210	Ø218	3	8-Ø23	8-Ø28	19	20	344
DN200	612	Ø340	Ø360	Ø295	Ø310	Ø265	Ø274	3	12-Ø23	12-Ø28	20	22	468

DELUGE VALVE
MODEL FIG12

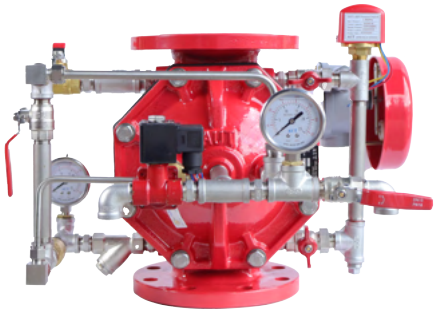

PRODUCTION STANDARDS

MODEL FIG12 I DN50 - DN200
PN10 - PN16

Connection	EN1092-2 ISO 7005-2
Face to Face	Flange x Flange
Pressure Class	PN 16

DESCRIPTION

- The AUT Model FIG 12 Deluge Valve DN50 thru DN200 (2" thru 8" inch) is a diaphragm type valve designed for vertical installation and for fire protection system service.
- They are used as "automatic water control valves" in deluge systems. When properly trimmed, the FIG 12 deluge valves are also able to provide actuation of fire alarms upon system operation.
- The diaphragm style design of the FIG 12 Deluge valve allows external resetting which provides for easy resetting of a deluge system without having to open a valve cover to manually reposition a clapper and / or latch mechanism.
- Simply repressurizing the diaphragm chamber resets the valve

MATERIAL SELECTION

No	Items	Material
1	Valve Body	Ductile iron
2	Valve Cover	Ductile Iron
3	Diaphragm	Nylon Fabric, Reinforced, Natural Rubber
4	Spring	Stainless Steel
5	Spring Seat	Nylon
6	Hex Bolt	Stainless Steel
7	Flat Washer	Stainless Steel

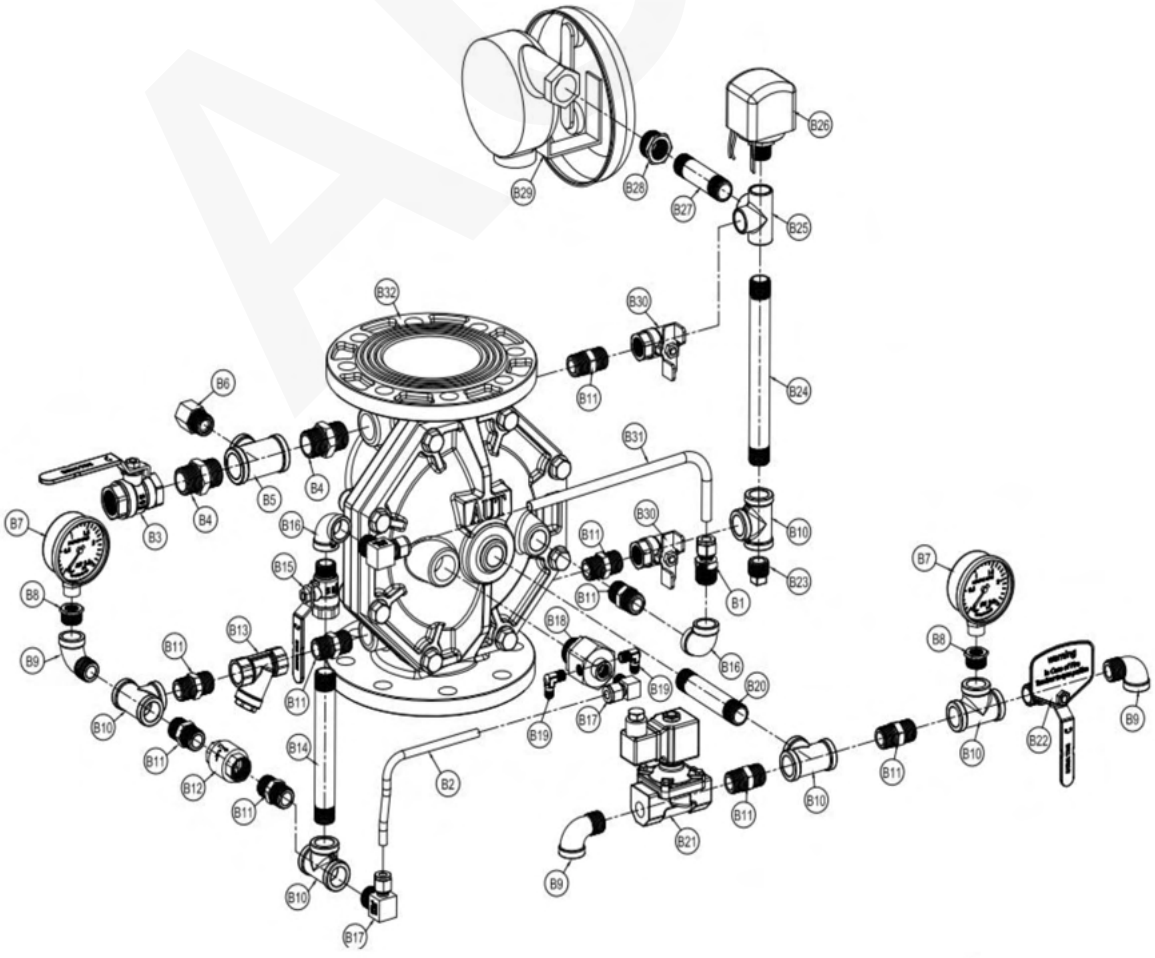

DELUGE VALVE
MODEL FIG12

VERTICAL ELECTRIC ACTUATION TRIM

No	Description	Materials	Qty
B1	Loose socket hexagon nut $ 10 union G1/2	304 Stainless Steel	1
B2	Stainless Steel Pipe Φ8	304 Stainless Steel	1
B3	Ball Valve G3/4	Copper Alloy Combination parts	1
B4	Nipple G3/4	304 Stainless Steel	2
B5	Reducer tee with internal thread	304 Stainless Steel	1
B6	Automatic Drain Valve G1/2	304 Stainless Steel Combination parts	1
B7	Pressure Gauge M14*1.5 2.5Mpa	304 Stainless Steel Combination parts	2
B8	Bushing M14*1.5 G 1/2	304 Stainless Steel	2
B9	90° Elbow with internal and external thread G1/2	304 Stainless Steel	3
B10	Tee with internal thread G1/2	304 Stainless Steel	5
B11	Nipple Straight Union G1/2	304 Stainless Steel	9
B12	Check Valve G1/2	Copper Alloy Combination parts	1
B13	Y- Strainer	304 Stainless Steel Combination parts	1
B14	Straight Pipe with external thread G 1/2	304 Stainless Steel	1
B15	Reset Ball Valve G1/2	304 Stainless Steel Combination parts	1
B16	90° Elbow with internal thread G1/2	304 Stainless Steel.	2
B17	90° Angle Fitting G1/2*8	304 Stainless Steel	2
B18	Anti-Reset Valve G3/4*G3/4*G 1/2	Copper Alloy Combination parts	1
B19	90° Angle Fitting G1/8	304 Stainless Steel	2
B20	Straight Pipe with external thread G1/2	304 Stainless Steel	1
B21	Solenoid Valve G1/2	Copper Alloy Combination parts	1
B22	Ball Valve G1/2	Copper Alloy Combination parts	1
B23	Plug G1/2	304 Stainless Steel	1
B24	Straight Pipe with external thread G 1/2	304 Stainless Steel	1
B25	3D Four Way with external thread G1/2	304 Stainless Steel	1
B26	Pressure Switch G1/2	Copper Alloy Combination parts	1
B27	Straight Pipe with external thread G1/2	304 Stainless Steel	1
B28	Bushing G 1/2*C3/4	304 Stainless Steel	1
B29	Water Motor Alarm G3/4	Aluminum Alloy Combination parts	1
B30	Ball Valve with short handle	304 Stainless Steel	2
B31	Stainless Steel Pipe 10	304 Stainless Steel	1
B32	Valve Body	GGG50-10 Combination parts	1

DELUGE VALVE
MODEL FIG12

DELUGE VALVE

The FIG 12 Deluge valves are for vertical installation only, and are rated for use at a maximum service pressure of 16 Bar (232 PSI)
End connections are flange x flange, drilled per either EN…GB or ISO specifications shown in Figure 2. Valve trim port connections are available as ISO 7-1 threaded only. Components for the DN50 thru DN300 (2" thru 12" inch), Model FIG 12 Deluge Valves are shown in Figure 1.

Notice

- The model FIG 12 Deluge Valve with Electric Actuation Trim described here in must be installed and maintained in compliance with these documents, as well as with the appliable standards of the National Fire Protection Association, in addition to the standards of any other authorities having jurisdiction. Failure to do so may impair the performance of these devices.

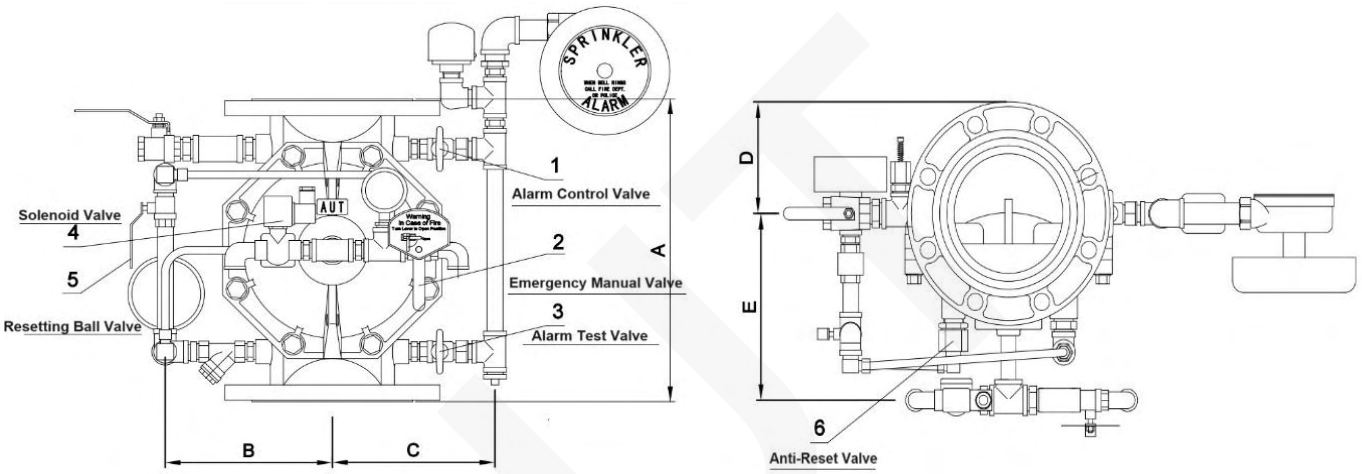

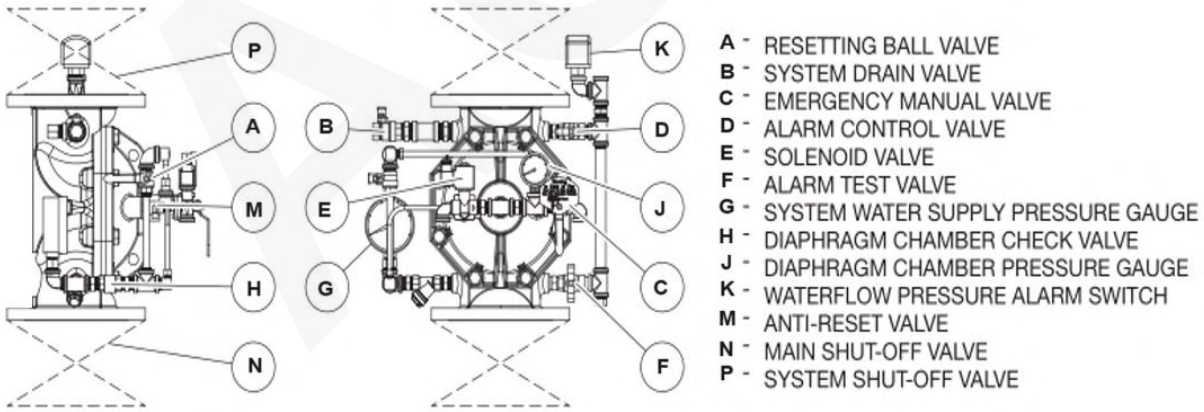

Size	Nominal Dimension in Millimeter				
	A	B	C	D	E
50	326	200	98	300	210
65	326	200	98	300	210
80	330	200	108	300	210
100	330	200	108	300	210
125	400	215	125	330	210
150	400	220	140	330	210
200	508	270	168	350	240

CHECK ALARM VALVE
MODEL FIG13



PRODUCTION STANDARDS

MODEL FIG13 I DN50 - DN200
PN10 - PN16

Connection	EN1092-2 ISO 7005-2
Face to Face	Flange x Flange
Pressure Class	PN 16

DESCRIPTION

- The wet alarm valve is a kind of one-way valve which only allows water to flow into the sprinkler system iN one direction and drives the supporting parts to give an alarm under the specified pressure and flow. It is a kind of fixed fire extinguishing system which consists of water flow indicator, pressure switch and sprinkler head. The system all the year round with a certain pressure force of water in the pipe network, in the prolonged state bar work, when somewhere there is a fire protection area, area environment temperature, thermal sensitive element of sprinkler release, thus open nozzle jet, and the whole system will start automatically send alarm signal, to achieve the purpose of, put out the fire in fire alarm and fire control.
- Wet alarm valve group, according to" the 2nd part GB5135.2 sprinkler systems wet alarm valve, delayer, water alarm motor" standard design. It consists of wet alarm valve, pressure switch, delayer, and water alarm motor, compensation pipeline, alarm pipeline, drain pipeline and other piping composition.
- The wet alarm valve manufactured by our company is well-made and made of exquisite materials with the advantages of stable working performance, high fire extinguishing efficiency, sensitive operation, simple maintenance, and reliable use. It is widely used in various places where water is used for fire extinguishing and there are a variety of specifications to choose from.

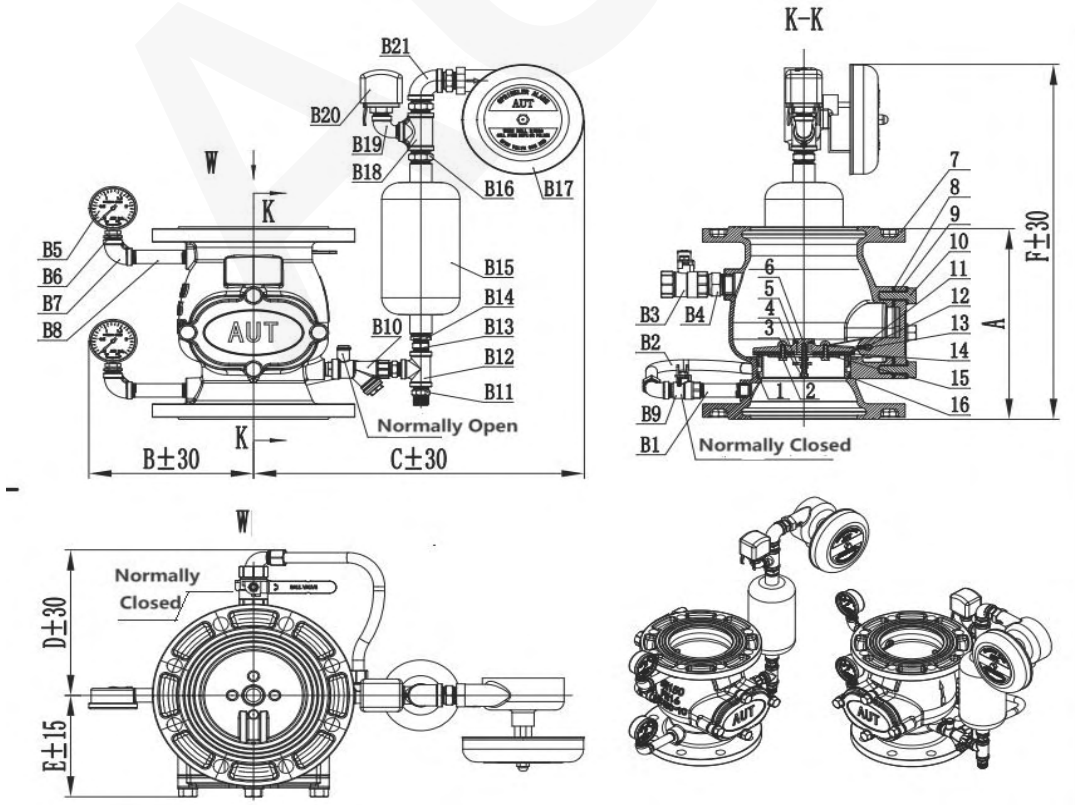

1. Alarm ball valve (Open)
2. Drainage ball valve (Closed)
3. Test alarm valve (Closed)

CHECK ALARM VALVE
MODEL FIG13

- Nominal working pressure: 1.6 M.pa
- Environment temperature: 4ºC < E.T <70ºC
- Relevant size: Below





MATERIAL SELECTION

No	Part Name	Material	Quantity
1	O Ring	NBR	2
2	Hexagon Head Bolt	8.8 Stainless Steel	4
3	Small Disc - Triangle Nut	ZCuZn38Mn2Pb2 (38-2-2)	1
4	Hexagon Head Bolt	8.8 Stainless Steel	1
5	Disc Small Seal Ring	NBR	1
6	Small Disc	ZCuZn38Mn2Pb2 (38-2-2)	1
7	Valve Body	QT450-10	1
8	Valve Cover Gasket	NBR	1
9	Valve Cover	QT450-10	1
10	Hexagon Head Bolt	8.8 Stainless Steel	8
11	Hexagon Head Bolt	8.8 Stainless Steel	1
12	Disc Pin Axis	06Cr19Ni10 (304)	1
13	Valve Disc	06Cr19Ni10 (304)	1
14	Sealing Ring	NBR	1
15	Sealing Ring Compression Ring	Q235-A	1
16	Valve Seat	06Cr19Ni10 (304)	

DIMENTIONS

MODEL	DN	A	B	C	D	E	F
FIG13	80	250±3.0	200	451	184	133	544
FIG13	100	250±3.0	218	451	184	133	544
FIG13	125	300±3.0	226	466	200	158	551
FIG13	150	300±3.0	231	466	200	158	170
FIG13	200	350±3.0	261	501	228	183	566
FIG13	250	436±5.0	296	534	355	235	570

CHECK ALARM VALVE
MODEL FIG13

No	Description	Material	Quantity
B1	Pipe G1/2*80	304 Stainless Steel	1
B2	Stainless steel hose G1/2	304 Stainless Steel	1
B3	Ball valve G1 (DN80-200), G2 DN200	Copper Alloy	1
B4	Nipple G1 (DN80-200), G2 DN200	304 Stainless Steel	1
B5	Pressure gauge 2.5MPa	304 Stainless Steel	2
B6	Pressure gauge seat G1/2*M14*1.5	304 Stainless Steel	2
B7	90° Elbow with internal thread G1/2	304 Stainless Steel	2
B8	Pipe G1/2	304 Stainless Steel	2
B9	Ball Valve G1/2	Copper Alloy	1
B10	Integrated Y filter + ball valve G1/2	Copper Alloy	1
B11	Nipple G1/2	304 Stainless Steel	1
B12	Tee G1/2	304 Stainless Steel	1
B13	Nipple G1/2	304 Stainless Steel	2
B14	Bushing G3/4*G1/2	304 Stainless Steel	1
B15	Delayer (Retard Chamber) G3/4	304 Stainless Steel	1
B16	Nipple G3/4	304 Stainless Steel	3
B17	Water Motor Alarm	Aluminum alloy Combination parts	1
B18	Tee G3/4*G3/4*G1/2	304 Stainless Steel	1
B19	90° Elbow with internal and external thread G1/2	304 Stainless Steel	2
B20	Pressure Switch	Combination parts	1
B21	90° Elbow G3/4	304 Stainless Steel	1

VALVE

AUT

GPRO VALVE SDN BDH

11A, Jalan USJ 1/31, 47600 Subang Jaya,Selangor, Malaysia
Phone : +603-8023 6900
Website: autvalve.com.my
Email : info@autvalve.com.my